Operating Instructions

Translation of original operating instructions

Vacuum Lifting Device SH-2500

SH 2500-UNI-B

Bitte beachten Sie, dass das Produkt ohne vorliegende Betriebsanleitung in Landessprache nicht eingesetzt / in Betrieb gesetzt werden darf. Sollten Sie mit der Lieferung des Produkts keine Betriebsanleitung in Ihrer Landessprache erhalten haben, kontaktieren Sie uns bitte. In Länder der EU / EFTA senden wir Ihnen diese kostenlos nach. Für Länder außerhalb der EU / EFTA erstellen wir Ihnen gerne ein Angebot für eine Betriebsanleitung in Landessprache, falls die Übersetzung nicht durch den Händler/Importeur organisiert werden kann.

Please note that the product may not be used / put into operation without these operating instructions in the national language. If you did not receive operating instructions in your national language with the delivery of the product, please contact us. In countries of the EU / EFTA we will send them to you free of charge. For countries outside the EU / EFTA, we will be pleased to provide you with an offer for an operating manual in the national language if the translation cannot be organised by the dealer/importer.

1 Contents

2 EC-Declaration of Conformity

Declaration of conformity

Description:	Vacuum Lifting Device SH-2500
Type:	SH 2500-UNI-B
Order-Nr.:	5240.0011
Manufacturer:	Probst GmbH Gottlieb-Daimler-Straße 6 71729 Erdmannhausen, Germany info@probst-handling.com www.probst-handling.com

Complies with the following provisions applying to it

EC-machinery directive 2006/42/EG

Based on the following harmonized standards (in excerpts):

EN ISO 12100-1 (ISO 12100-1)

Safety of machinery; Basic concepts, general principles for design,

Part 1: Basic terminology, methodology

EN ISO 12100-2 (ISO 12100-2)

Safety of machinery; basic concepts, general principles for design;

Part 2: principles and specifications

DIN EN ISO 13857

Safety of machinery — Safety distances to prevent hazard zones being reached by upper and lower limbs (ISO 13857:2008)

2014/30/EU (Electromagnetic compatibility)

DIN 45625

Airborne noise measurement; enveloping surface-procedure; compressor including vacuum pump (displacement-, turbo- and jet-compressors).

DIN EN 1012-1 / DIN EN 1012-2

Compressors and vacuum pumps; Safety requirements part 1 and 2.

Authorized person for EC-documentation:

Name: J. Holderied
Address: Probst GmbH; Gottlieb-Daimler-Str. 6; 71729 Erdmannhausen, Germany

Signature, informations to the subscriber:

Erdmannhausen, 18.01.2019.....

(M. Probst, Managing director)

3 Safety

3.1 Safety Symbols

	Danger to life! Identifies imminent hazard. If you do not avoid the hazard, death or severe injury will result.
	Hazardous situation! Identifies a potentially hazardous situation. If you do not avoid the situation, injury or damage to property can result.
	Prohibition! Identifies imminent a prohibition. If you do not avoid the prohibition, death and severe injury, or damage to property will result.
	Important informations or useful tips for use.

3.1 Safety Marking

WARNING SIGN			
Symbol	**Meaning**	**Order-No.:**	
	It is not allowed to be under hanging loads. **Danger to life!**	2904.0210 2904.0209 2904.0204	30 mm 50 mm 80 mm
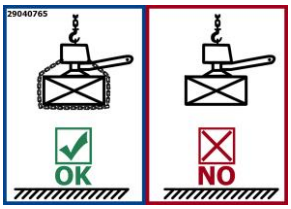	The sucked load must never be lifted and transported without additional securing by the load-securing-chain.	2904.0765	100 x70 mm
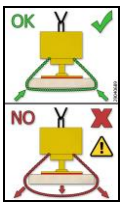	Load-securing-chain must fit tightly to the load. Load-securing-chain should never hang loosely under the load!	2904.0689	70x41 mm
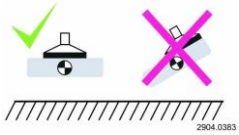	Do not lift any components off-centre.	2904.0383 2904.0594	102x52 mm 65x33 mm
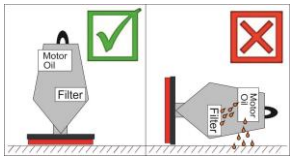	Store and transport the device only in a vertical position (standing) - never horizontally (lying), because otherwise motor oil flows into the air filter. The consequences can be start problems and strong smoke emission.	2904.0584 (97x52 mm)	

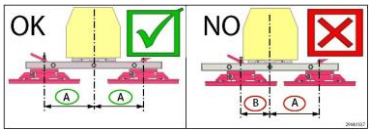	It is not allowed to position suction plates off-centre.	29040337 (optional)
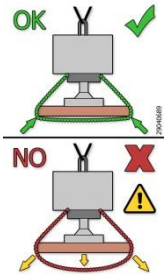	Load securing with the use of a spreader bar (TRA) on the vacuum lifting device: - The safety chains must fit tightly to the load - **Prohibition:** safety chains must never hang loose under the load!	29040688 (optional)

WARNING SIGN

Symbol	Meaning	Order-No.:	Size:
	Danger of squeezing the hands.	2904.0221 2904.0220 2904.0107	30 mm 50 mm 80 mm
	Danger: Injury of hands and fingers – belt drive	2904.0451	48x54 mm
	Warning of hot surfacce!	29040396	31x27 mm

REGULATORY SIGN

Symbol	Meaning	Order-No.:	Size:
	Each person in your company involved in the installation, start-up, operation, maintenance, and repair of the device must have read and understood the operating instructions and especially the chapter "Safety" therein	2904.0665 2904.0666	30 mm 50 mm
	Use hearing protection.	29040298	50 mm
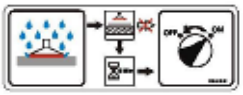	Iny case of wetness, 5 minutes dry running.	29040381	150x55 mm
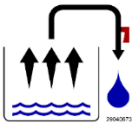	Daily drain off the condensation water on the device	29040673	40x40 mm
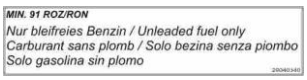	Use unleaded fuel only (Min. 91ROZ/RON).	29040340	30x130 mm

	c	29040444	30x60 mm
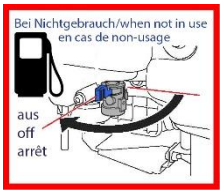	Close the petrol cock when not in use, as gasoline may escape if shaken during transport	29040624	58x50 mm
INFORMATIONS SIGNS			
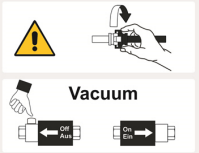	First tighten the hose coupling before actuating the slide valve (vacuum on-off).	29040392	70x65 mm
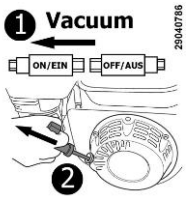	Before starting the engine, switch on the vacuum via the manual slide valve.	29040786	55x55 mm
	Yearly expert inspection (TÜV)	29040056	85x45 mm

3.1.1 Function Control

- Before using the device check the functions and the working condition.
- Maintenance and lubrication are only permitted when device is shut down!

- Do not use the device, until all faults which can cause safety hazards are removed.
- If there are any cracks, splits or damaged parts on any parts of the device, **immediately** stop using it.

- The operating instructions must be available at the workplace every time.
- Do not remove the data-plates of the machine.
- Unrecognisable information signs must be replaced.

3.2 Safety at work

- The use of the vacuum lifting device is only permitted in proximity to the ground.
  The suctioned load must be lowered immediately after picking up (e.g. from a pallet or a truck) to just **above the ground** (approx. 20 - 30 cm).
  The load must then be secured by the **load securing chain** and may only then be transported to the installation site. To transport the load, lift it only as high as necessary (recommended approx. 0.5 m above the ground).**Do not swing it over peoples heads. Danger to life!**
- The manual guiding of is only allowed for devices with handles.
- The operator is not allowed to leave the control unit as long as the vacuum lifting device loaded with load (stone slab). The load must always be in the range of vision of the operator.
- Always keep an eye on the vacuum gauge. Never lift loads when the vacuum is below the required under pressure (mbar). If the pointer of the pressure gauge moves into the red danger zone, **lower the load immediately! Danger! Load could fall down!**

- While using the vacuum lifting device is the stay of persons in the working area forbidden. Except it is indispensable. Caused of the way of using the vacuum lifting device , e.g. if the device must be leaded by hand (on the handles).
- While using the vacuum lifting device be sure that there are no persons in the working area. **Danger to Life!!**
- The device must never be subjected to a force acting in a lateral direction due to diagonal pulling.
- Do not lift any components off-centre, because that could fall down. **Danger of tilting!**
- Release the load only when it is completely safely resting on the surface. **Keep fingers away from the load when you release it as they can be crushed!**
- The capacity and the nominal width the vacuum lifting device are not allowed to cross over.
- Do not use the vacuum lifting device to jerk seized set down load.
- **Jerking up or down** of the unit with or without load is **prohibited**! Unnecessary vibrations must be avoided. As well as **fast driving** with the carrier/ hoist over uneven terrain! Danger to life/accident: The load could fall or the load handling attachment could be damaged! As a general rule, **only** drive at **walking speed** with the lifted load!

3.3 Instructions for the Company

The lifting devices are manufactured according to current technical standards and are safe. However, they will present hazards

- if they are not operated by qualified or, at the least, trained staff,
- if they are used contrary to the approved applications.

Problems can arise

- for the health and life of operators and other persons,
- for the lifting device and other valuable goods.

3.4 Instructions for Installation, Maintenance and Operating Personnel

The device must be installed and maintained by qualified personnel, mechanics and electricians.

Each person in your company involved in the installation, start-up, operation, maintenance, and repair of the device must have read and understood the operating instructions and especially the chapter "Safety" therein.

Your company must ensure by internal measures

- that the operators of the lifting device are properly trained,
- that they have read and understood the operating instructions,
- that the operating instructions will be available to them at any time.

The responsibilities for the tasks carried out with the device must be clearly organized and observed. There must be no ambiguity regarding responsibilities.

3.5 Requirements for the Installation Location

- The lifting vacuum lifting device may not be used in explosion-risk rooms or areas.
- The ambient temperaturemust be between 3° and 40 °C (if this temperature is exceeded, please consult the manufacturer before using the device).
- The vacuum lifting device must be connected to the electrical supply and the main switch of the crane from which it is suspended.
  Ensure, by means of internal instructions and regular inspections, that the area around the workplace is kept clean and tidy at all times.

3.6 Special Hazards

- The operating range has to be covered for unauthorized persons, especially children.
- The workplace has to be sufficiently illuminated.
- Take care when handling wet, dirty and not solidified components.
- **The working with the vacuum lifting device in case of atmospheric editions under 3° C (37,5° F) is forbidden! Because the goods could be fall down caused by dampness or freezing.**
- Take care in case of thunderstorm!
- Since the load is held on the suction plates of the unit by a vacuum, it will fall off as soon as this vacuum is lost (e.g. energy failure).
- This can happen if the vacuum generator fails. An integrated vacuum reservoir maintains the vacuum for a short safety period whose duration depends on the porosity of the work piece surface.
- If the vacuum generator fails, lower the load immediately if this is possible. Otherwise, leave the danger area below the load immediately.
- The unit draws in large amounts of air and hair and items of clothing can be drawn into the air inlet. **Do not** look into the air inlet when the unit is running: it is even possible for your **eyes to be drawn into the air inlet.**

3.6.1 Hydraulic excavator and other lifting equipments

- Hydraulic excavator and other lifting equipments have to be in good, safe working condition.
- Only authorized, certificated and qualified personnel is allowed to operate the excavator and other lifting equipments.
- The operator staff must have all the necessary qualifications.
- **Take care that the maximum capacity of the hydraulic excavator and other lifting equipments is not exceeded.**

3.7 Workplaces

- The workplace of the operator is in front of the operator handle.
- The operator must stand so that he can see the vacuum gauge at all times.

3.8 Testing the Safety Devices

The lifting device is equipped with following safety equipment:

- pressure gauge (with red danger zone display)
- alarm signal (audio)

Check this equipment

- at the beginning of each shift (when operating in shifts),
- once a week (when operating continually).
- Correct faults before operating the device. If faults occur during operation, switch the device off and correct the faults before continuing work with the device.

3.8.1 Inspecting the vacuum hoses and hose clamps

- Check that all vacuum hoses and hose clamps are securely seated. Tighten any loose connections.

3.8.2 Testing the vacuum reservoir

- See the sub-section "Leak test" in the section ”Maintenance”
- Rectify any detected faults before using the lifting device. If a fault becomes apparent during, switch off the lifting device and rectify the fault.

3.9 Damages of suction plate

Avoidance of damages:

To avoid damages of the rubber seal on the suction plate (chinks, abrasion) take notice, that:

during the operation (lifting, transporting and lowering) with the device, the suction plate does not brush or pump against other products or materials.

Otherwise the rubber seal on the suction plate could be damaged (danger of pressure loss).
Load could fall down. **Danger of accidents!**

3.10 Protective equipment

The protective equipment must consist, according to the safety regulations of the following parts:

- Protective clothing
- Safety gloves
- Safety shoes
- Hearing protector

3.11 Behaviour in Emergencies

An emergency situation exists when

- power suddenly fails (device switches off),
- the vacuum pressure drops below -0.6 bar to the red section on the scale of the vacuum gauge.

Lower the load immediately if possible. If this is not possible, immediately leave the dangerous area near the load, since it will be dropped from the device.

3.12 Checking the Safety Devices

The lifting device is equipped with following safety devices:

- vacuum gauge with red danger zone
- warning device, audible (optional)

Check these devices at the beginning of each shift (when operating in shifts) or once a week (when operating continually).

Check safety devices:

- at the beginning of each shift when operation is interrupted, or
- once a week for continuous operation

Checking the Vacuum Gauge and the Warning Device

⇨ **Switch on the lifting device.**

⇨ **Place the lifting device on a sheet metal plate or similar and suck in the plate.**

⇨ **Attention: Only suck in the plate, do not lift it! The plate can come loose during the inspection and fall down.**

If the vacuum is built up, create a leak at the sealing lip of the suction plate. The vacuum at the manometer decreases. When the pointer reaches the red danger zone, the warning device must give an alarm.

To ensure that the warning device operates safely, always test the device for function before each use.

1. The function test is performed at ambient temperature without an attached workpiece
   (manometer shows 0 mbar).
2. Press button for approx. 1 second
3. Evaluate the signal tone:

Signal tone approx. 2 sec. → Function test successful. → Warning device ready for operation.

Very short signal tone (10 ms) → Battery voltage too low → Replace the batteries or sensor faulty → Replace entire warning device

No signal tone at all → Batteries dead → Replace the batteries oder Electronics faulty → Replace entire warning device.

***Note**: A short signal tone of 10 ms is necessary for technical reasons to test the voltage of the batteries.*

(For further information see separate operating instructions in the appendix)

Checking the Vacuum Hoses and Hose Clamps:	Check all vacuum hoses and clamps for proper mounting and tighten the clamps if necessary.
Checking the Vacuum Reservoir	See “Testing for Leaks"“ in chapter “Maintenance“ **Correct any faults before using the device. If faults occur during operation, switch the device off and correct the faults before continuing work with the device.**

4 General

4.1 Authorized use

- The device is only designed for the use specified in this documentation.
- Every other use is not authorized and is forbidden!
- All relevant safety regulations, corresponding legal regulations, especially regulations of the declaration of conformity, and additional local health and safety regulations have to be observed.

Prior to every operation the user must ensure that:

- the equipment is suited to the intended operation, the functioning and the working condition of the equipment is examined, and the loads are suitable to be handled.

Any doubts about instructions should be raised with the manufacturer prior to use.

<u>ATTENTION:</u> The use of this device is only permitted in proximity to the ground (→ chapter "Safety at work").

The device *SH 2500 UNI B* is exclusively applicable for lifting, transporting and laying of dense natural stones, concrete and marble slabs, pipes and steps,and so on with the corresponding suction plates.

- This device can be hung from any carrier/support frame (e.g. excavator) by means of load hook, chains, cables and such like.
- The load is additionally secured with the standard load securing chain.
- Various suction plates can be fitted to the device (*SH 2500 UNI B*) via a quick release locating pin, enabling it to be used for many different purposes and with many different loads.
- **The carrying capacity/working load limit (WLL) of the device (SH-2500-UNI-B) of 2.500kg must not be exceeded!**

This device is equipped with the following safety devices:	• Safety vacuum storage tank (12,5 l). • Vacuum gauge. • Pressure relieve valve. • Warning device (audible). • Integrated load-securing chain and chain box • Optional spreader bar TRA (with load-securing chain) for the multiple attachment of suction plates to the vacuum lifting device
Optional accessories:	• Wheel set SH-2500-RS • Handle extension SH-2500-HGV

Only suction plates of the manufacturer **PROBST** shall be used, which shows doubtless a **maximum load capacity** at a pressure of **- 0.6 bar** (**- 8,7 psi**) at the *carrying capacity sticker*. In unclear circumstances the vacuum device and the suction plate may not be put into operation. The manufacturer must be contacted!

- Some suction plates which can be mounted to the device will reduce its carrying capacity.
  The maximum load is indicated on each suction plate.
- Use only suction plates which are ***approved*** for this device!
- ***Do not exceed*** the maximum carrying capacity of the suction plates!!!
  Danger: Load (stone slabs) **will fall down!**

NOT ALLOWED AKTIVITIES:

Unauthorized alterations of the device and the use of any self-made additional equipment could cause danger and are therefore **forbidden**!!

Never exceed the **carrying capacity/working load limit (WLL)** and the **nominal width/nominal size** of the device.

All unauthorized transportations with the device <u>are not allowed</u>:

- Transportation of people and animals.
- Transportation of other loads and materials than described in this manual.
- Never suspend any goods with ropes, chains or similar at the device.

<u>ATTENTION:</u> The use of this device is only permitted in proximity to the ground.

- The load (stone slabs) which is to be sucked and transported, must have sufficient inherent stability, otherwise there is **risk of breakage** when lifting!
- Stone slabs **must not** be bend when lifting - especially take care with thin and large-sized stone slabs!
- Generally, the load (stones slab) is only to be sucked in the **middle**, otherwise the load hangs diagonally under the device which may cause a breaking of the load - especially when lifting large stone slabs with a small suction plate.
- Standard suction plates are not suitable for the transport of glass plates!

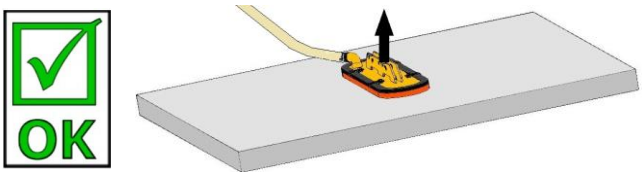

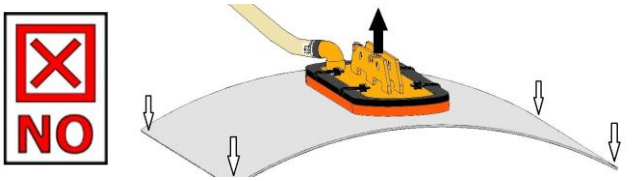

5 Description

5.1 Components of the lifting device SH 2500 uni b

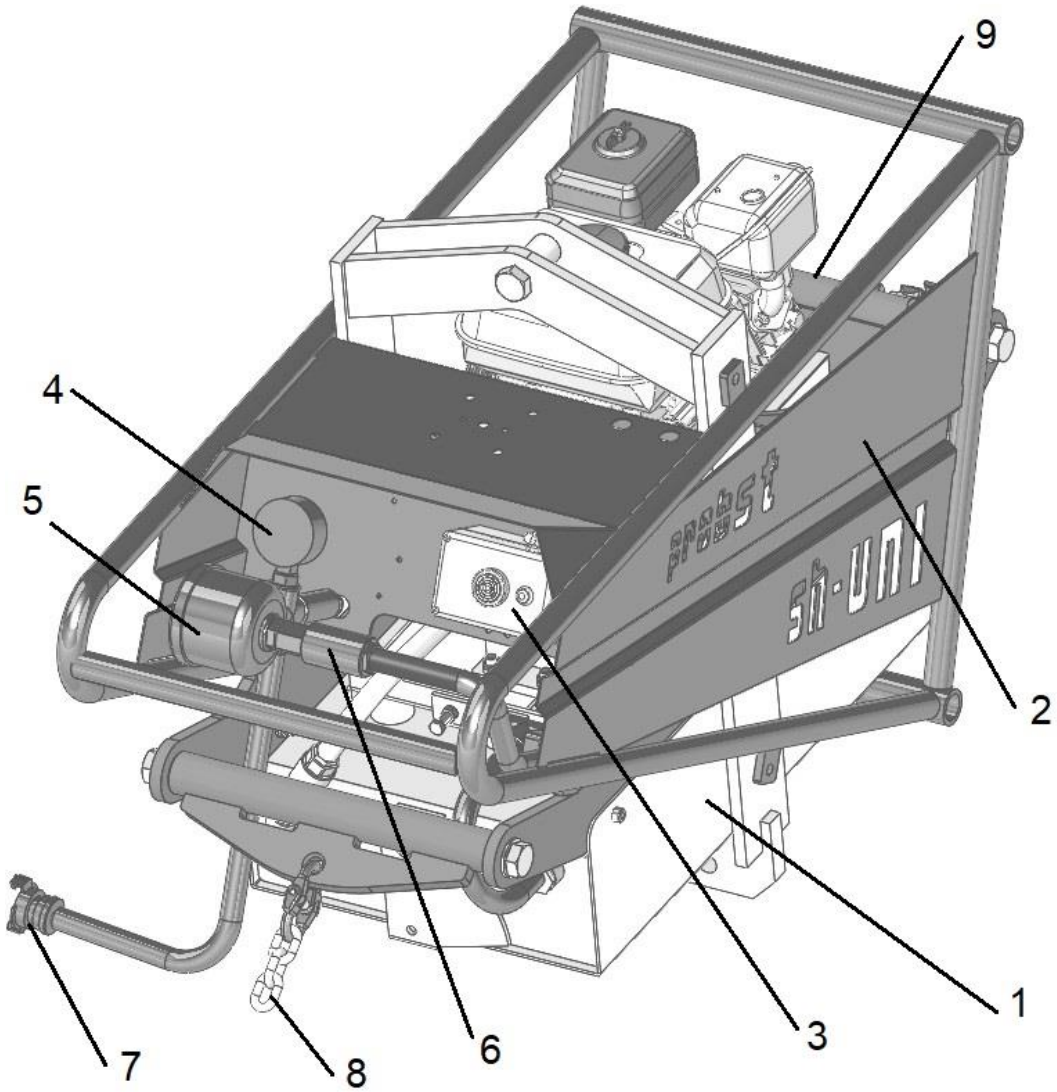

Parts that have a safety function appear in **bold type.**

Item	Description	Item	Description
1	Body	5	Vacuum filter
2	Control frame	6	Hand-operated slide valve
3	**Warning device**	7	Coupler, ½"
4	**Vacuum gauge**	8	Load-securing chain
		9	Chain box

6 Technical Data

	SH 2500 uni b
Max. lifting capacity [WLL] at -0,6 bar under pressure	2,500 kg (WLL 5,500 lbs)
Weight [kg]	approx. 120
Volume of backup supply [l]	29
Suction capacity of vacuum pump [m³/h]	16
Noise level [dB(A)]	approx. 70
Max. motor capacity (at 3600 1/min) [kW]	2.2
Fuel tank capacity [l]	3
Fuel consumption [l/h]	approx. 0.9
Fuel	Gasoline (unleaded)
Operating temperature range	+5°C to +40°C

6.1 Controls

- **Choke** used to start the engine
- **Recoil starter** used to start the engine
- **Gas tap at the engine** to adjust the engine speed
- **Control lever at the motor** to switch the engine on/off
- **Fuel valve** to start/stop the fuel supply
- **Hand-operated slide valve** for applying suction to and releasing the load:
  - shift to the right = to apply suction and retain the load
  - shift to the left = to release the load
- **Switch on warning device** activates the warning device (always active).
- **Button on the warning device** battery test for warning device

6.2 Warning device (audible)

See attached operating instructions of the warning device (in appendix).

6.3 Vacuum pump

- The vacuum pump generates the vacuum for the lifting device.
- The vacuum pump and the pressure regulator are optimally adjusted ex-works and must not be re-adjusted.

6.4 Suction pads

- The different suction pads apply the vacuum to the load. They are designed to lift various items.
- Use only suction pads which are approved for this device.
- Do not exceed the maximum lifting capacity of the suction pads.

7 Installation

7.1 Mechanical connection

7.2 Initiation

The device must be installed and maintained by qualified personnel, mechanics and electricians.

7.3 Mounting the suction pad to the lifting device

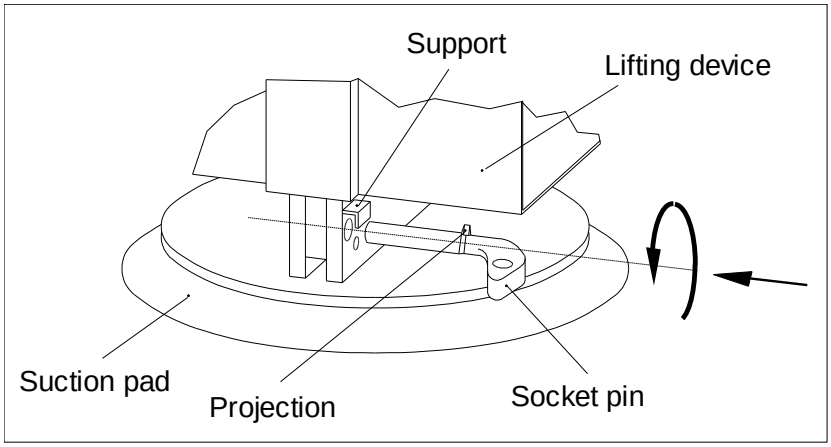

- Suspend the lifting device from the suspension eye bolt on the crane or hoist used. Secure it safely!

Take the weight of the lifting device and the maximum carrying capacity into consideration!

- Insert the suction pad into the support of the lifting device.
- Feed the socket pin into the boring until the projection of the socket pin is at the shoulder of the suction pad. Turn the socket pin downward until the projection is secure under the support. Check whether the socket pin firmly secured. The socket pin must not be able to be pulled out without turning.
- Connect the vacuum hose to the suction pad and lock it with the integrated lock nut.
- Before lifting loads check the safety equipment as described in section 1.12.

7.4 Optional Accessoires (SH-2500-RS and SH-2500-HGV)

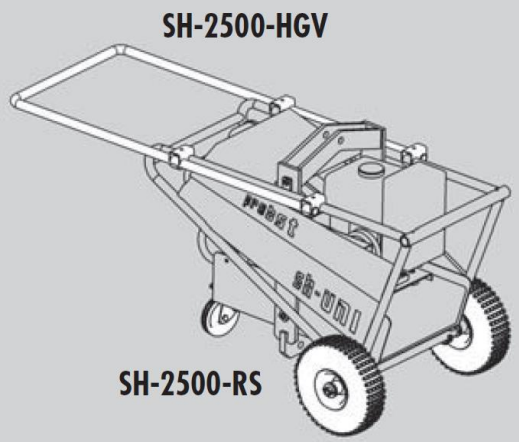

SH-2500-RS

- To extend the working radius of Micro Jumbo MJ at any time, we recommend the solid set of wheels for later equipment.
- The wheelset consists of two attachable main wheels (diameter Ø 300 mm), one foldable support-wheel and one swivelling wheel. Later attachment to the basic device SH is no problem.

SH-2500-HGV

- Should be used when laying elements wider than 1 meter, in order to keep operators feet in safe distance from load.
- Handle Extension SH-2500-HGV can be fitted at any time later to the structure of SH-2500-UNI by bolting it on with brackets.

7.5 Refueling the engine

- **Gasoline is highly flammable. Always keep the fuel tank closed.**
- Do not smoke or allow flames when using gasoline. Do not inhale the fumes.
- To refuel the engine, switch off the device and engine.
- Only refuel the engine when it is switched off and cooled down.
- After refueling, tightly close the tank.
- Do not fill the fuel tank completely; fill up to approx. 4cm under the brim of the fill neck, so the fuel has room to expand.
- Starting the engine
- Stopping the engine

7.6 Use of the spreader bar with 2 (3) suction plates

When using the crossbar with 2 suction plates only suction plates of the same design (carrying capacity, dimensions and form) may be used!

The suction plates must always have the *same* distance (A) to the vertical centre axis of the crossbar (see figure 1).

Unequal positioning of the suction plates is not permitted (see figure 2)!

Take care that the load (stone slab) hangs always *horizontal*.

For special spreader bars where 3 suction plates are permitted, they must be positioned in the same way (see Fig. 3).

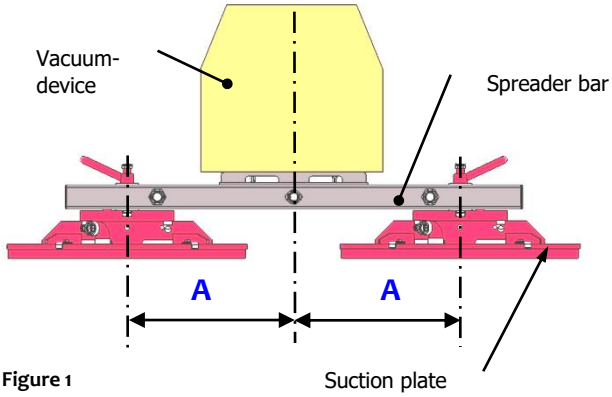

Figure 1

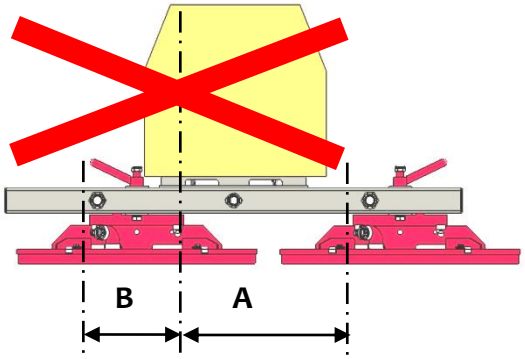

Figure 2

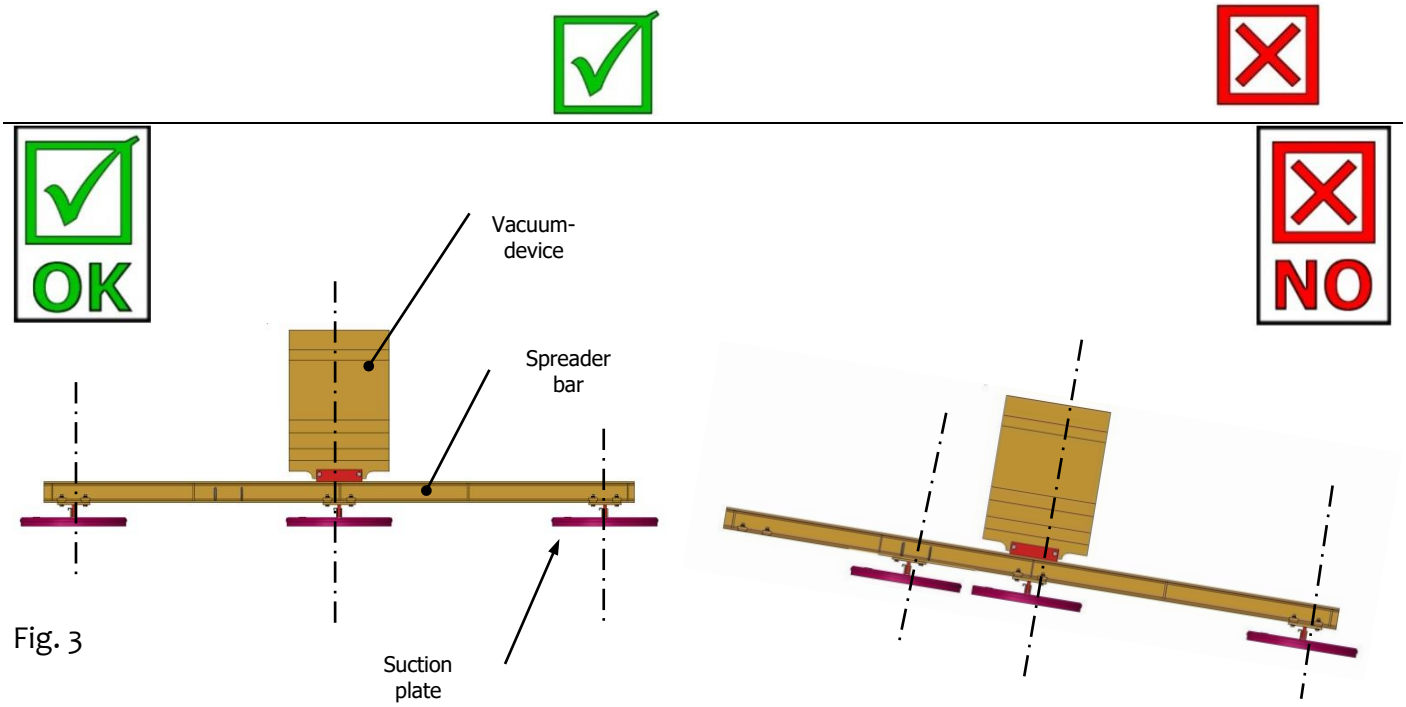

Fig. 3

7.6.1 Attaching the safety chain (of the optional spreader bar)

- Lift the device with the sucked load just a little (approx.. 20-30 cm)
- Then remove both safety chains from the chain cases of the spreader bar (TRA).
- Throw the safety chains underneath the load (concrete slab) .
  Never grip with the hands under load. - Caution: Danger of squeezing hands!!!

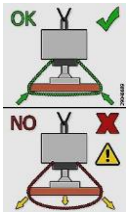

- Suspend and tighten both safety chains as shown in picture 1. Place the end of the chains into the chain cases.
- The safety chains must fit tightly to the load, in that way that the load is held in case of a vacuum failure (Fig. 1)
- **The safety chains must NEVER hang loose under the load, otherwise the load may fall down, in case of a vacuum failure** (Fig. 2). **Danger to life!**
- Now the device with sucked load be transported to the place of destination.
- Lower the load carefully (distance to the ground approx. 20-30 cm), then remove safety chains and throw it under the load.

- Never grip with the hands under load (stone slab)! Danger of squeezing!!!
- Safety chains should be returned to chain cases.
- Put the device with the sucked load completely down on the floor.

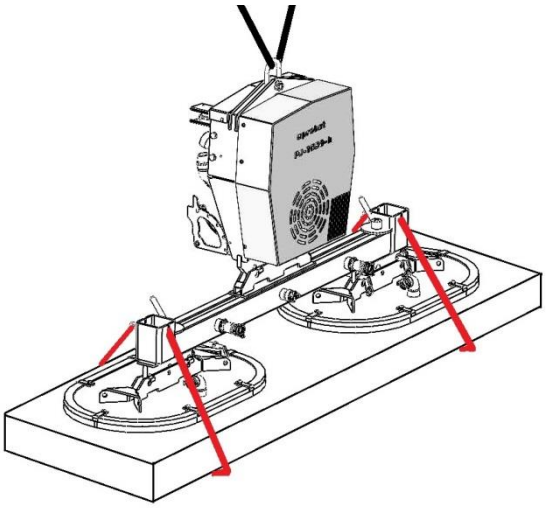

Fig. 1

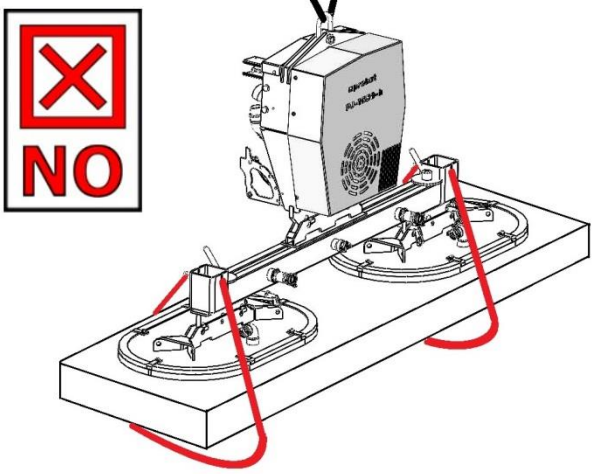

Fig. 2

8 Operating

8.1 Safety Instructions

- Wear safety shoes and gloves.
- Never exceed the maximum lifting capacity of the device or of the crane or hoist used. Include the weight of the lifting device. Observe the name plate.
- Some suction pads which can be mounted to the device will reduce its carrying capacity. The maximum load is indicated on each suction pad. Never exceed the load indicated!
- Lift and transport the load only with fastened load-securing chain!
- Always lower the load before taking longer breaks!
- Operate the device only when the warning device is switched on.
- If the warning device sounds, reduce the load immediately if possible.
- Do not stand below the load. Always keep clear of the load.
- Never transport people or animals with the load or the lifting device itself!
- Operate only when you can view the entire working area. Look out for other persons in the working area. Never maneuver loads above people.
- Do not let go of the handle while lifting a load.
- Do not pull loads to the side or drag them along with the lifting device.
- Do not tear off loads that have become stuck.
- If a power failure occurs, put the load down immediately if possible. Immediately leave the danger area near the load.
- Apply suction to and lift appropriate loads only (check for stability and porosity).
- Always monitor the pressure gauge. Never lift loads when the vacuum is below **-0.6 bar**.
- **When the pointer of the pressure gauge moves into the red danger zone below -0.6 bar, replace the load immediately.**
- Set work pieces down on free, level surfaces only, as they could otherwise slip.
- Release the load only when it is completely safely resting on the surface.
  Keep fingers away from the load when you release it as they <u>can be crushed</u>!
- Always distribute load evenly on the suction surfaces.
- **The use of the vacuum lifting device is only permitted in proximity to the ground.**
  The suctioned load must be lowered immediately after picking up (e.g. from a pallet or a truck) to just above the ground (approx. 20 - 30 cm).
  The load must then be secured by the load securing chain and may only then be transported to the installation site.
  To transport the load, lift it only as high as necessary (recommended approx. 0.5 m above the ground).
  It is forbidden to swivel the device over persons. Danger to life!

8.2 Lifting and Landing Loads

The following operating steps must be checked by a qualified mechanic before the operating staff can use the device. Correct faults before start-up.

In order to ensure safe operation of the device, a battery test of the warning device must be carried out before each use of the device. See chapter "Checking safety devices".

8.2.1 Lifting Loads:

- Start the gasoline engine (further details → see **HONDA** operating instructions). and switch on the warning device.
- Position the lifting device directly above the load. Do not pull to the side. Distribute load evenly.
- Place the lifting device on the load.
- Shift the bushing on the slide valve. Suction is applied to the load.
- Watch the pressure gauge. As soon as a vacuum pressure of **-0.6 bar** has been reached you can lift the load. **Do not under any circumstances lift the load before the manometer has reached this level as the load would fall off.**
- When lifting be sure to lift only one piece at a time. Use a screwdriver to carefully remove any pieces attached to the one you are lifting before proceeding. **Do not separate them with your hands as they could be crushed!**

8.2.1.1 Fastening the load securing chain

- Lift the device with the sucked load just a little (approx. 20-30 cm), then remove the load-securing chain (8) from the chain case (9) and throw it under the lifted load.
- **Never grip with the hands under the load (stone slab) – danger of squeezing the hands!**
- Suspend and tighten the load-securing chain (1) on the other side of the device (place the end of the chain into the chain case (9).

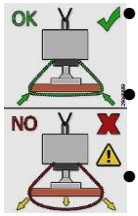

- The load-securing chain **must** fit **tightly** to the load (see F ig. A), so that load with vacuum failure (e.g. due to power / vacuum failure) is held by the security chain.
- The safety chain must NEVER hang loose under the load, otherwise load may fall down, in a vacuum load failure (e.g. due to power failure).**Danger to life!**
- Now the device with sucked load be transported to the destination.
- Lower the load carefully (distance to the ground approx. 20-30 cm), then remove safety chain and throw it under the load.
- **Never grip with the hands under load (stone slab)! Danger of squeezing!**
- Load-securing chain (8) should be returned to chain case (9).
- Place the device with the sucked load completely on the floor.
- Once the load has been held by the load securing chain, the load securing chain must be properly tested and replaced if necessary. **Damaged load-securing chains must not be used any further!!**

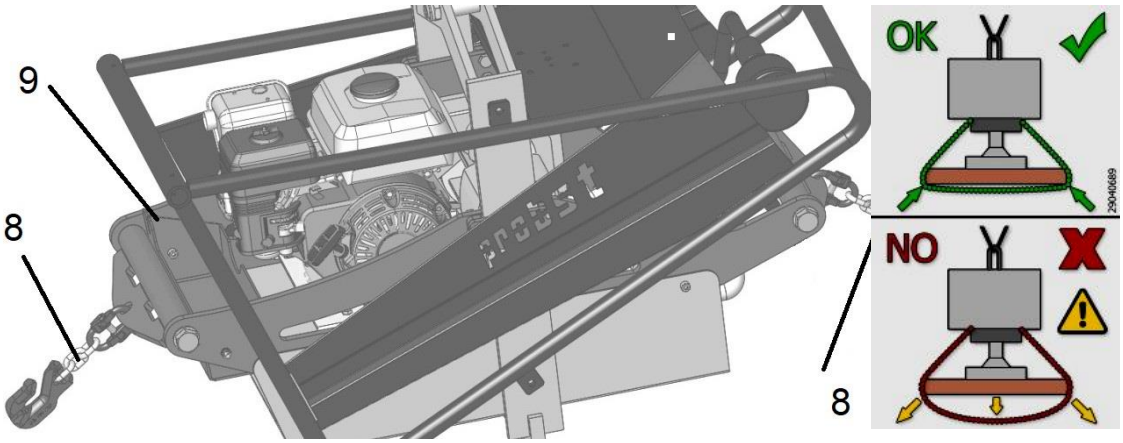

Fig. A

8.2.2 Lowering Loads:

- Lower the load to a safe and clear, level surface, to ensure that the load cannot slip or tip over.
- Shift the bushing (6) on the slide valve back. The load is released.

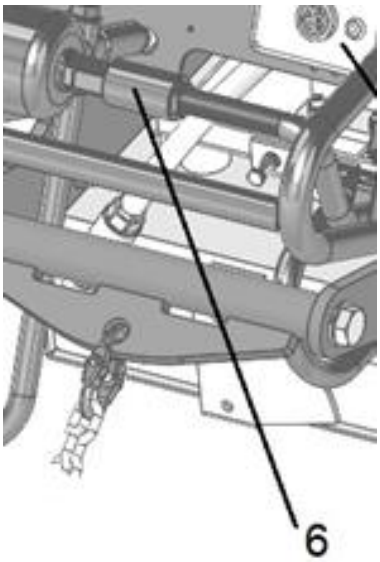

8.2.3 Lifting wet loads

- The lifting device is not intended for picking up wet stone slabs. When picking up wet stone slabs, please observe the following:
- Remove water from the suction surface.
- Carry out the following points after working with damp parts:
- Lift up the lifting device. Make sure that the area around the suction plate is clear and that no items or water can be drawn in.
- Let the pump idle to run dry for at least 5 minutes.

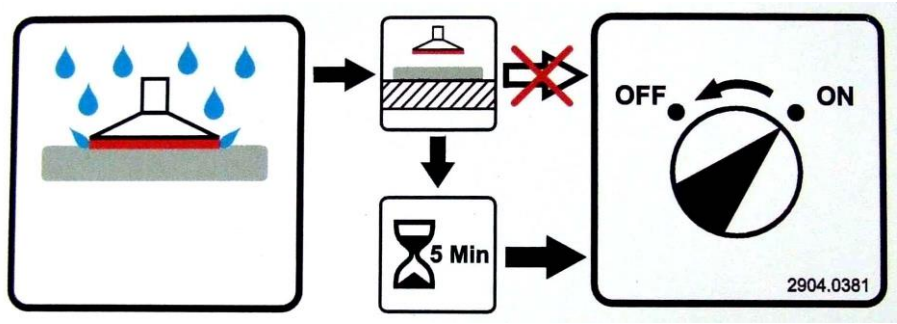

- Then switch off the device.
- Open the condensate drain screw on the bottom of the storage container. Drain the water completely and tighten the drain screw securely.

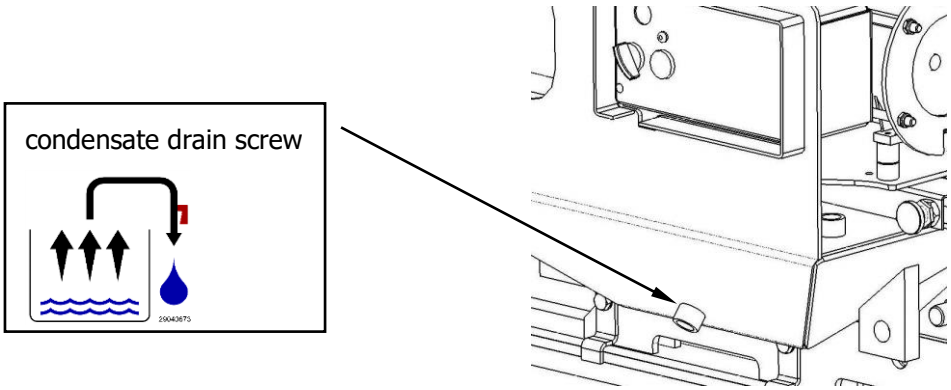

8.2.4 Downtime

Store the device in a closed and frost-free room (not uncovered outdoors).

9 Troubleshooting

The device must be installed and maintained by qualified personnel such as mechanics and electricians only.
After each repair or maintenance job check the safety equipment.

Error	Cause	Remedy
Pump does not run	Engine is defective	Check the engine/call customer service
	V-belt is broken/too loose	Replace/restretch the V-belt
Pump runs, but does not produce suction	Slide valve is closed	Open it
	Vacuum hose is defective, connectors are not tight	Check, replace vacuum hose
Vacuum pressure does not reach -0.6 bar	Workpiece has cracks, openings or is porous	Workpiece is not suitable for suction
	Seal is damaged	Replace the seal
	Pressure gauge is defective	Replace the pressure gauge
	V-belt is loose	Restretch the V-belt
Engine does not run Engine does not run	Fuel tank is empty	Refuel the tank
	Fuel valve is closed	Open the fuel valve
	Engine is defective	Check the engine/call customer service
Petrol engine goes out and immediate re-starting is not possible	Gasoline supply interrupted	Check gasoline lines and fuel level in tank
	Ignition coil is defective	Check ignition coil and if necessary exchange
Warning device does not function	See engine operating instructions (appendix)	
Load cannot be sucked. Prescribed negative pressure cannot be achieved no more. Negative pressure diminishes itself too fast, when switching the device off.	Leakage at vacuum plate by deposited dirt between rubber seal and suction plate. Rubber seal wore or porously (aging after effect of UV radiation)	Remove rubber seal from suction plate. Clean suction plate and slot in rubber seal. Draw up and fasten rubber seal on suction plate again. If necessary exchange rubber seal.

10 Maintenance and care

10.1 Maintenance

To ensure the correct function, safety and service life of the device the following points must be executed in the maintenance interval.

Used **only original spare parts**, otherwise the warranty expires.

All operations may only be made in unpressurised, electro less and closed state of the device!

The device must be installed and maintained by qualified personnel such as mechanics and electricians only.
After each repair or maintenance job check the safety equipment as described in the "Safety" chapter.

MECHNICAL

SERVICE INTERVAL	Maintenance work
First inspection after 25 operating hours	• Control and tighten all screws and connections. (The implementation is only allowed by an expert).
All 50 operating hours	• Tighten all screws and connections (take care that the tightening torques according to the property class of the screws are observed). • Check all joints, bolts, guidance's and gears for correct function, if necessary adjust or replace it.
Minimum 1x per year (at rough conditions shorten the interval)	• Check of all the suspension parts, bolts and straps. Check for corrosion and safety by an expert.

10.2 Maintenance intervals

The yearly inspection must be performed by a qualified specialist.

	Interval				
	Daily	Weekly	Monthly	Every six months	Yearly
Inspect safety features (see chapter Sicherheit): • Vacuum gauge • Check that warning light flashes at correct underpressure/overpressure values • Visual inspection of load securing chain **1)**	X				X
Inspect vacuum filter and replace if necessary		X			X
Gasoline motor (see also separate operating instructions)					
Inspect V-belt, replace if necessary			X		
Replace V-belt					X
Check oil fill level (oil dipstick)	X				
Change oil				X	
Inspect air filter		X			
Replace air filter (more frequently in dusty environments)					X
Inspect spark plug				X	
Replace spark plug					X
Vacuum pump (see also separate operating instructions)					
Replace the oil and oil filter every 500 to 2000 operating hours and at least every 6 months (oil quantity 1.5 l, oil type: see separate operating and maintenance instructions for the vacuum pump)				X	
Are the vacuum hoses in good condition (not brittle, not kinked, no worn sections and no leaks)?			X		X
Are all connections (hose clamps, etc.) tight?				X	X
Are type, load capacity and warning signs in a complete and legible condition?					X
Are the operating and maintenance instructions available and are operators familiar with them?					X
Check all load-bearing parts (e.g. suspension) for deformation, wear or other damage.					X
Clean suction plate / Inspect for cracks, evenness of sealing lip, etc. Replace if necessary		X			X
Has the test label been updated?					X
General condition of the device					X
Leak test			X		X
Draining the condensation water	X				X
Condition of load securing chain **1)**					X

1) Once the load has been held by the load securing chain, the load securing chain must be properly tested and replaced if necessary. Damaged load-securing chains must not be used any further!!

10.3 Vacuum pump (TFK 12)

See vacuum pump operating instructions (in appendix)

10.4 V-Belt

- Check the V-belt tension monthly.
- The V-belt must not protrude more than 1cm or it will need to be rest retched.
- Procedure:
- Replace the protective cover

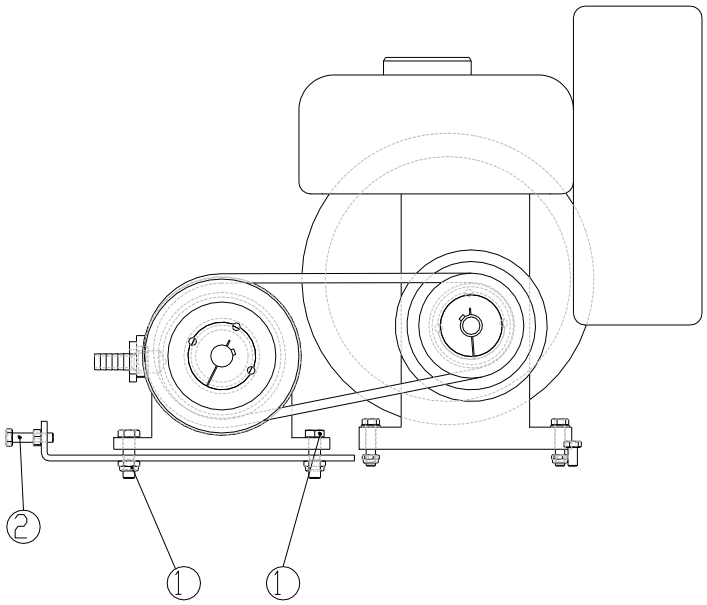

- Release the 4 hex bolts (1)
- Release the locknuts of the hex bolts (2)
- Tighten the hex bolts (2) until the correct V-belt tension is reached.
  When tightening be sure that the V-belt wheels are aligned.
- Tighten the locknuts of the hex bolts (2)
- Replace the protective cover

10.5 Suction pads/ seals

- Remove items and contaminations such as adhesives, glue, saw dust, dust etc. from the seals at least once a week. Use glycerin to clean the seals.
- Immediately replace damaged seals (those with tears, holes, ripples).
- Do not use petrol (gasoline) to clean the device. It is highly flammable and its fumes are hazardous. Use cold-cleaning solvent. Do not smoke while cleaning.
  Do not use aggressive or corrosive fluids to clean the device. The vacuum hose will otherwise become leaky or be destroyed.

10.6 Vacuum filter

- Check the filter at least once a week, blow the filter cartridge out (from the inside to the outside).
  Do not knock the filter!
  When it is contaminated heavily, replace the filter cartridge.
- Do not allow dust to enter into the suction opening when removing the filter cartridge.

10.7 Warning device (audible)

See the warning device operating instructions (appendix)

10.8 Leak test

- Switch on the lifting device/engine.
- Place the lifting device on a piece of sheet metal or a similar surface and apply suction.

Caution: Only apply suction to the sheet; do not lift it! It can loosen while being checked and fall off.

- Switch the pump on and wait until a vacuum pressure of -0.6 bar is reached.
- Switch off the engine and watch the pressure gauge. Suction should not decrease by more than 0.1 bar within 5 minutes. If it does, locate the cause for this error and correct it before operating the device.

10.9 Safety procedures

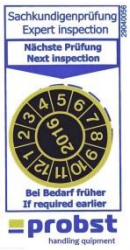

- It is the contractor's responsibility to ensure that the device is checked by an expert in periods of max. 1 year and all recognized errors are removed (→ see DGUV regulation 1-54 and DGUV norm 100-500).
- The corresponding legal regulations and the regulations of the declaration of conformity must be observed!
- The expert inspection can also be done by the manufacturer Probst GmbH.
  Contact us at: service@probst-handling.com
- We recommend affixing the inspection sticker "„Sachkundigenprüfung / Expert inspection" in a clearly visible place (order no.: 2904.0056+Tüv sticker with year number) after the inspection has been done.

The check by an expert must be proved!

Device	Year	Date	Expert	Company

10.10 Hints to the identification plate

Type, serial-number and production year are very important for the identification of your device. If you need information to spare-parts, warranty or other specific details please refer to this information.

The maximum carrying capacity is the maximum load which can be handled with the device. Do not exceed this carrying capacity.

If you use the device in combination with other lifting equipment (Crane, chain hoist, forklift truck, excavator) consider the deadweight of the device.

Example:

10.11 Hints to the renting/leasing of PROBST devices

With every renting/leasing of PROBST devices the original operating instructions must be included unconditionally (in deviation of the users country's language, the respective translations of the original operating instructions must be delivered additionally)!

1. Safety

Instructions for installation, maintenance and operating staff
This unit should only be installed and maintained by qualified specialist personnel.
All persons commissioned with the task of setting up, starting up, operating, maintaining and repairing the device at the company of the user must have read and understood the operating instructions, in particular the “Safety” section.
The company of the user must take internal measures to ensure that:

- ⇨ The users of the device are trained.
- ⇨ They have read and understood the operating instructions.
- ⇨ The operating instructions are accessible to them at all times.

The responsibilities for the various tasks to be carried out on the unit must be clearly specified and adhered to.

Caution

Do not cover the opening for the alarm generator sound.
Do not close the reference pressure hole.

Installation location requirements
The unit may not be operated in rooms where there is a risk of explosion.
The ambient temperature may not exceed 50 °C.

Intended use
The unit is designed to monitor the operating vacuum.
For safety reasons, the unit may not be modified or changed without approval.

- ⇨ The operating, maintenance and servicing conditions prescribed in these operating instructions must be observed.
- ⇨ Rectify any faults before starting up the device. Should faults occur during operation, they must be rectified immediately.

2. Technical Specifications

Power supply	2 x D batteries 1.5 V, 18,000 mAh
Frequency range of alarm generator	Approx. 3,000 Hz
Noise level of alarm generator	> 95 dB(A)
Dimensions	120x80x70 mm

3. Description

The warning device is designed for lifting units that require a self-powered warning device.

The warning device creates an audible warning signal as soon as the vacuum falls below approx. 600 mbar.
It also monitors vacuum drops and increases.
No warning signal occurs when the vacuum drops very quickly (lowering the workpiece) or increases very quickly (picking up dense work pieces with a small suction plate). Nor does a warning signal occur if the vacuum is lower than approx. 70 mbar.

Caution **To ensure that the warning device operates safely, always test the device for function before each use.**

Caution **While working, always watch the manometer attached to the lifting unit to aid the warning device in recognizing vacuum drops.**

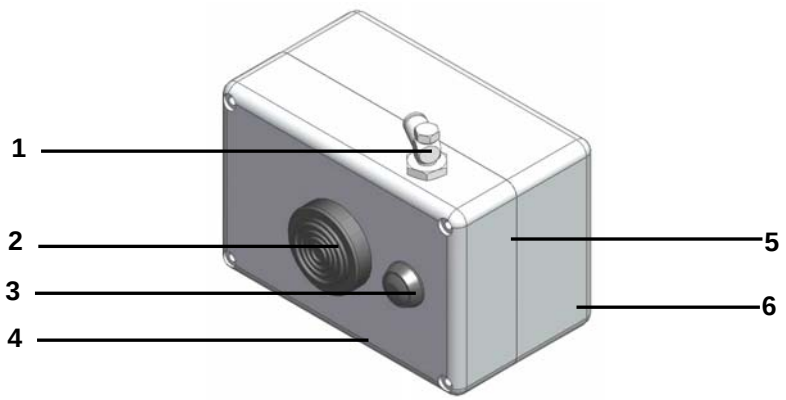

No.	Product name
1	Vacuum connection
2	Alarm generator
3	Button for the function test
4	Reference pressure hole
5	Housing cover
6	Housing lower section

Product name	Item No.
D battery 1.5 V (2 required)	21.07.01.00019

4. Function Test

Caution **To ensure that the warning device operates safely, always test the device for function before each use.**

During the function test, all of the electronics including the alarm generator and sensor are tested and the state of the batteries is checked.

Performing the Function Test

1. The function test is performed at ambient temperature without an attached workpiece (manometer shows 0 mbar).
2. Press button for approx. 1 second
3. Evaluate the signal tone:

Meaning of function test signal tone:

	Signal tone	Meaning
☺	**Signal tone approx. 2 sec.**	**Function test successful. → Warning device ready for operation.**
☹	Very short signal tone (10 ms)	Battery voltage too low → Replace the batteries
		Vacuum or pressure applied → Perform test at ambient temperature
		Sensor faulty → Replace entire warning device
☹	No signal tone at all	Batteries dead → Replace the batteries
		Electronics faulty → Replace entire warning device

***Note**: A short signal tone of 10 ms is necessary for technical reasons to test the voltage of the batteries.*

5. Maintenance

In order to maintain the device, perform the prescribed function test daily or before starting work.
Remove the batteries from the device if it is to be idle for an extended period.
The vacuum hoses must be checked for leaks and damage on a monthly basis.

Caution **The batteries must be replaced if the function test fails or cannot be performed, or if the alarm generator becomes quieter. Replacing the batteries does not mean that the function test does not have to be performed.**

The replacement interval depends on use conditions and the frequency of alarms.

Note on accident prevention inspections:

It is recommended to replace the batteries of the warning device during the yearly accident prevention inspection of the entire lifting unit.
Additionally, a complete lifting procedure with simulation of a leakage should be carried out during the yearly accident prevention inspection.

Replacing the batteries

1. Unscrew the housing cover.
2. Replace the D batteries with new ones of the same type. Observe the polarity.
   Do not use lithium-ion or rechargeable batteries.
3. Dispose of batteries in accordance with the existing regulations.
4. Screw the housing cover shut.
5. Perform the function test. The device is now ready for operation.

6. Troubleshooting

Problem	Cause	Solution
Alarm generator does not sound when button is pressed (see function test for procedure)	Button was not held long enough	Press button for approx. 1 second
	Button is pressed continuously (e.g. jammed, stuck in place)	Free the button and press it again
	Batteries dead	Replace batteries
	Battery contacts are corroded or dirty	Clean the battery contacts and the contact surfaces of the battery holder
	Electronics fault	Replace entire warning device
Alarm generator does not sound on vacuum drop	Vacuum hose plugged, kinked or ruptured	Replace hose
	Batteries dead	Replace batteries
	Battery contacts are corroded or dirty	Clean the battery contacts and the contact surfaces of the battery holder
	Electronics fault	Replace entire warning device
Alarm generator is quiet	Battery voltage too low	Replace batteries immediately.

Vacuum Pump
TFK 12

Operating Manual - Vacuum Pump TFK 12

Contents

Technical data

Pump data:	**All data in reference to speed of 1400 RPM**		
max. Flow		12 m³/h	
max. Vacuum (abs.)		200 mbar	
max. Pressure		1 bar (intermittent only)	
Vacuum port		1 x G ¾	
Pressure port		1 x G ¾	
Dimensions (lxwxh)		approx. 248x185x154 mm	
Operating temp.		-5 °C - +40 °C	
Storage temp.		-30 °C - +90 °C	
Life time		> 10000 h	
Inspection interval		4000 h (for wearing parts)	
Wearing parts		Vanes	
Operation (DIN VDE 0530)		S1 (cont.) at free flow and vacuum S1 (cont.) at pressures to 600 mbar S3 (int.) 10% at pressures to 1000 mbar	
Max. speed		2400 RPM	
Weight		10.5 kg	
Sound level	The A-weighted sound pressure level can exceed 70 dB(A).	 **Wear ear protection !**	

Performance curve (at 1400 RPM)

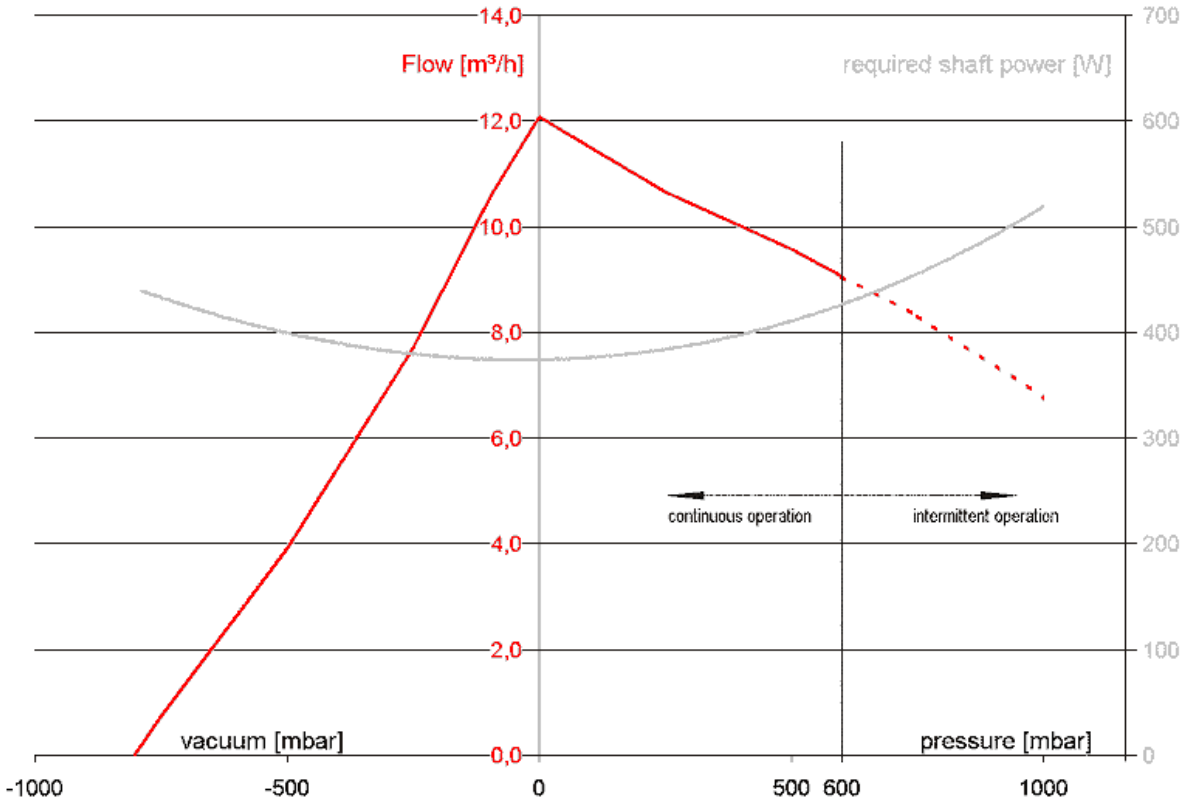

General usage

Theses pumps are designed for air only. They are not intended for other gases nor liquids.

Operation is not permitted in potentially explosive areas (for example near gas tanks). Pumping flammable or explosive gases is also not permitted.

Operate the pump only within the given pressure limits. The usage of pressure relief valves or pressure switches is recommended.

Special technical features

The TFK 12 is a dry running rotary vane air pump for creating either vacuum or pressure. Special carbon materials and high construction tolerances allow low maintenance and high performance.

- **Lubrication free**: All parts of the pump are self-lubricating and must not be lubricated.
- **Drive**: The shaft can be driven successfully through normally available direct couplings, belt drives or gears. Here the performance can be significantly altered.
- **Service**: Other than cleaning and filter changes, the service is limited to a vane service. Such a service can readily be performed by the operator.

This pump is intended for use at a speed of 1400 RPM. Please take into consideration that at higher speed the service interval can be reduced.

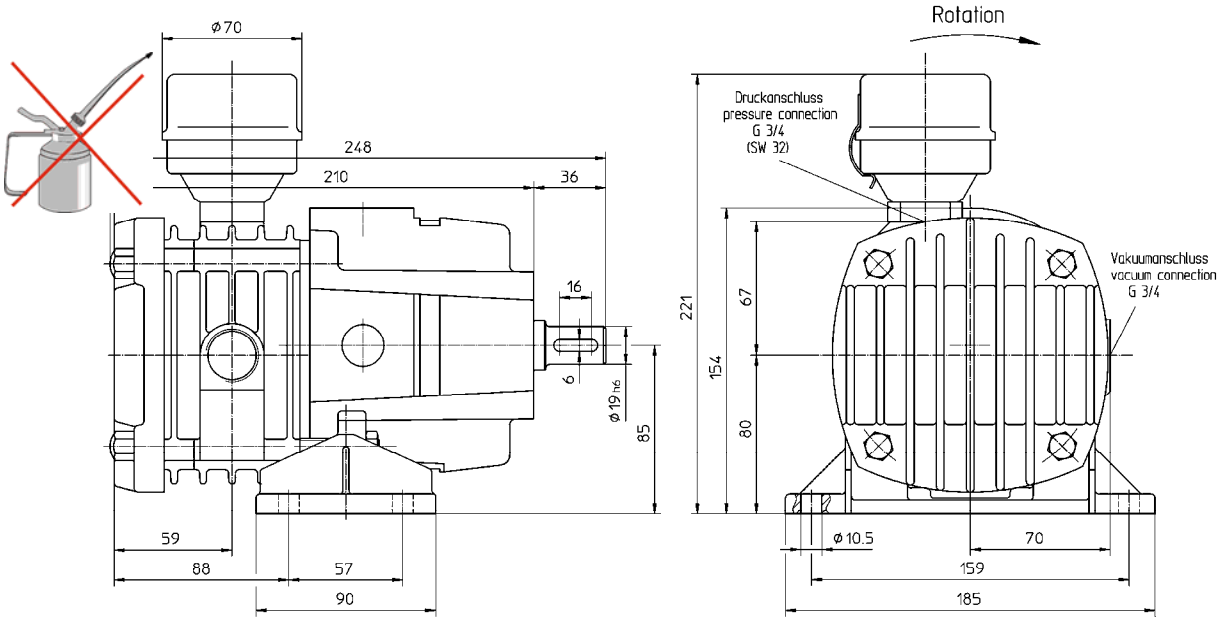

General safety instructions


Read the operating instructions


Wear safety glasses


Wear protective gloves


Wear ear protection

- **Keep order in your working area!**
  Disorder at the working place poses a great risk of accident.
- **Take external influences into account.**
  Never expose electric appliances to rain. Do not use electric appliances in damp surroundings. Provide sufficient light. Electric appliances must not be used in close proximity to flammable liquids or gasses.
- **Protect yourself against electric shock.**
  Avoid touching earthed parts with your body (such as pipes, heating radiator, stoves etc.).
- **Keep children away.**
  Other persons must not touch the appliance or the cable. Keep them away from your working area.
- **Keep the appliance in a safe place.**
  Appliances that are not in use must be kept dry and secure. Keep them out of the reach of children.
- **Do not overload your appliance.**
  Do not exceed the indicated power range.
- **Use the correct tools.**
  Do not use tools that are not sufficient for heavy work. Do not use the appliances for any work they are not intended for.
- **Wear appropriate industrial clothing.**
  Do not wear loose clothes or jewellery. Use protective gloves and protective shoes. Use a hair-net if your hair is long.
- **Wear eye protection.**
  In case of dust formation during the work, wear a breathing mask.
- **Use the cable for its intended purpose only.**
  Do not hold the appliance at the cable when carrying it. Do not pull at the cable to unplug the appliance. Protect the cable from heat, oil and sharp edges.
- **Always keep a stable position.**
  Avoid abnormal postures. Ensure that you stand firmly and always keep your balance.
- **Always take good care of your appliance.**
  Follow the maintenance instructions. Check the cable and the plug regularly and have these parts replaced by a professional in case they are damaged. Keep the handles dry and free from oil or grease.
- **Disconnect the appliance from the power supply.**
  Do this when maintaining or cleaning the appliance or when it is not in use.
- **Never leave a tool in the appliance.**
  Before switching on the machine make sure that all tools and adjusting tools have been removed from the appliance.
- **Avoid that the appliance starts unintentionally.**
  Do not put your finger onto the ON-switch when carrying an appliance which is connected to the power supply. Make sure that the switch is in the OFF position when connecting the appliance to the power supply.
- **Outdoor extension cord.**
  For outdoor use, use only an extension cord that has been designed for this use. Ensure it carries the respective label.
- **Always pay attention.**
  Observe your work. Proceed reasonably. Never use the appliance if you are not fully concentrating.
- **Check if the appliance has been damaged.**
  Check if the safety fittings as well as slightly damaged parts work correctly. In order to guarantee a safe and reliable operation, all parts must be mounted correctly. Do not use those appliances with a switch that cannot be turned on and off. Have the switch replaced in a special workshop.
- **Repair work may only be performed by a professional.**
  This appliance complies with the relevant safety requirements. To avoid danger to the operator it must only be repaired by professionals.

Special safety instructions

Read the complete operating instructions carefully and strictly adhere to the described regulations so that the pump can be operated safely.

- Each time before putting the appliance into operation check if the cable, the plug, the hose and the connections are damaged. Damaged parts must be repaired by a professional.
- Avoid narrowing of the hoses, for example due to dirt accumulation or kinking.
- Ensure adequate ventilation.
- Mount the pump horizontally.
- Provide for additional safeguards so that no damage can be caused should the pump fail.
- During continued operation the pump surfaces get hot. Do not touch the pump during or immediately after operation.
- The pump has internal leakages. If the motor is switched off and if there is a vacuum at the suction side of the pump, it might occur that the pump rotates backward. If the pump is then immediately started it may pump in the wrong direction. If necessary a suitable check valve should be installed.
- Do not change or modify the appliance!
- Persons under the age of 16 must not operate the pump.
- Use original spare parts only.

Installation

Warning: During operation the pump surfaces become very hot. There is the danger of burning.

Mount the pump on a solid horizontal surface. Couple the drive to the free shaft ensuring correct alignment. When using a belt drive the tension should not exceed 110N.

Check the turning direction.

Mount the pipe fitting into the G1/4” outlet port.

Ensure that the largest possible tube sizes with shortest paths are used. Every restriction, bend and length of tube reduces the performance of the pump.

If components are connected to the outlet the pump will experience higher temperature due to compression heating.

Protect the pump from impact and vibration through the use of rubber damping.

Ensure that cooling air can flow freely around the pump.

A professional installer should connect the power. Before staring, double check if the pressure / suction components are connected correctly.

Should water be present in the system prevent it from reaching the pump with a suitable water separator. Avoid the build up of condensation in the system.

Use a suitable filter to prevent dirt and dust entering the pump. It is possible such contamination could cause a pump to fail.

Operation

Wear protective clothing during operation.

Should the pump not provide sufficient performance check the system for leakages, pinched tubes etc. Any damaged should be repair by a qualified technician.

Fault finding

The following list summarises possible malfunctions and describes how to eliminate them.
Should you not be able to eliminate the malfunction, please return the pump to the manufacturer for repair.

In case of any malfunction switch off the appliance immediately and disconnect it from its power supply.
Always disconnect the appliance from the power supply before performing any repair or maintenance work.

Fault	Possible cause	Action
pump runs but does not create a vacuum	Vanes or rotor are broken.	Return the pump for repair.
pump runs but the efficiency is too low	Diameter of hose is too narrow.	Check diameter and remove and kinks.
	Filter restricted through contamination	Clean filter
	Filter oily	Renew filter
	Hoses, fittings or seals dirty	Clean hoses, fittings and seals and replace them if necessary
	Other leakages	Check system for leakages
	pump is operating at high altitude	Try to find another solution
	Pump parts are worn	Replace vanes
Pump does not start	Power failure	Check the fuses and the cable
		Check the position of the switch
		Check that the power supply corresponds to the details on the name plate
	Pump seized	Remove possible contaminants in the pump head. Remove and replace any damaged parts
Pump rotates backward	Vacuum exists inside the pump head	Install a check valve

All work on current carrying parts should be undertaken by a qualified technician only.

Service and cleaning

Warning: During operation the pump surfaces become very hot. There is the danger of burning.

Never oil any pump parts. All moving parts are service free and do not need lubrication. Oil / grease inside the pump can lead to failure.

Always disconnect the power before commencing work on the pump.

The pump head contains carbon vanes that wear over time. The wear rate is dependent upon operating conditions, contamination of the inlet air and operating temperature. Regularly check the conditions of the vanes at a maximum interval of 4000 operation hours. If the pump is run at higher speed than 1400 RPM this interval is reduced.

Regularly clean the inlet filter.

Clean the outside of the pump with a damp cloth and regular household detergent. Do not use spirit based cleaners since this may damage the painted surfaces. Avoid spraying the pump with either water or stream.

After servicing check for leakages and function of the pump / system before switching the pump on.

While servicing handle all parts with care and keep them clean at all times. Contamination, scratches, nicks, distortions etc all have a negative effect on the pump performance and lifetime, and can even lead the seizing of the pump. If in doubt return the pump to the manufacturer for checking.

Always replace any worn parts with new parts.

When the pump is opened you will come into contact with black carbon dust. This dust is not harmful and can easily be removed from you hands with a light soap and water.

Vane service

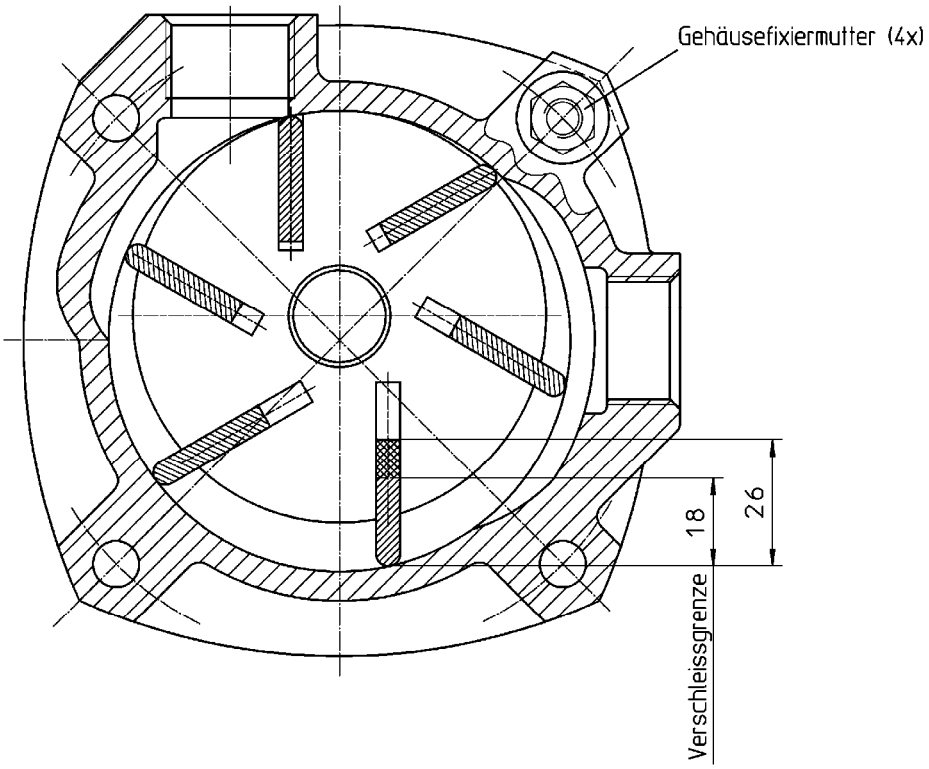

- Disconnect the pump from the power supply.
- Mark the position of the cover to the housing and loosen the 4 M8 nuts on the pump head.
- Lift and remove the pump cover.
- Remove the vanes and measure the vane length (see diagram above). If the length is below 18mm replace them with new vanes.
- Replace all 6 vanes together.
  Order number of a set (6 pieces) of vanes: **22.09.01.00147**
- Check all parts for damage. If any damage is discovered return the pump for repair to the manufacturer.
- Whilst the pump is open rotate the shaft by hand. Check for smooth operation to determine if any parts rub or bearings are damaged.
- Replace the cover and fasten with the 4 x M8 nuts. Use a torque of 20 Nm.
- Clean or replace all filters.

Guarantee

This product is subject to the legal warranty if it is used as intended. The warranty period starts on the date of delivery.

Wearing parts are exempted form the guarantee. If not mentioned otherwise these parts have to be checked after 4,000 hours of operation at the latest and have to be replaced if necessary.

In order to guarantee the faultless operation of the product it is advisable that this maintenance work is carried out by the manufacturer.

Using the product improperly or disregarding the maintenance intervals renders any and all parts of the warranty void.

HONDA

GX120 · GX160 · GX200

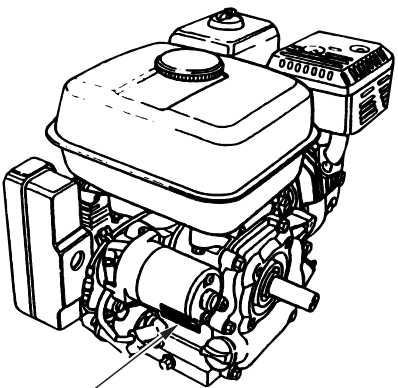

Serial number and
engine type

OWNER'S MANUAL

CE

32ZH7620

00X32-ZH7-6201

HONDA EUROPE N.V.(EEC)
www.honda-engines-eu.com

Thank you for purchasing a Honda engine.

This manual covers the operation and maintenance of your engine:
GX120 · GX160 · GX200

All information in this publication is based on the latest product information available at the time of printing.

Honda Motor Co., Ltd. reserves the right to make changes at any time without notice and without incurring any obligation.

This manual should be considered a permanent part of the engine and should remain with it if it is resold.

Pay special attention to statements preceded by the following words:

⚠WARNING **Indicates a strong possibility of severe personal injury or death if instructions are not followed.**

CAUTION: **Indicates a possibility of personal injury or equipment damage if instructions are not followed.**

NOTICE **Indicates that equipment or property damage can result if instructions are not followed.**

NOTE: Gives helpful information.

If a problem should arise, or if you have any questions about your engine, consult an authorized Honda dealer.

⚠WARNING

The Honda engine is designed to give safe and dependable service if operated according to instructions. Read and understand the Owner's Manual before operating the engine. Failure to do so could result in personal injury or equipment damage.

1 SAFETY INSTRUCTIONS

⚠WARNING

To ensure safe operation—

- **Honda engine is designed to give safe and dependable service if operated according to instructions. Read and understand the Owner's Manual before operating the engine. Failure to do so could result in personal injury or equipment damage.**

- **Always make a pre-operation inspection (page 6) before you start the engine. You may prevent an accident or equipment damage.**
- **To prevent fire hazards and to provide adequate ventilation, keep the engine at least 1 meter (3 feet) away from buildings and other equipment during operation. Do not place flammable objects close to the engine.**
- **Children and pets must be kept away from the area of operation due to a possibility of burns from hot engine components or injury from any equipment the engine may be used to operate.**
- **Know how to stop the engine quickly, and understand the operation of all controls. Never permit anyone to operate the engine without proper instructions.**
- **Do not place flammable objects such as gasoline, matches, etc., close to the engine while it is running.**
- **Refuel in a well-ventilated area with the engine stopped. Gasoline is highly flammable and explosive under certain conditions.**
- **Do not overfill the fuel tank. There should be no fuel in the filler neck.**
  Make sure that the filler cap is closed securely.
- **If any fuel is spilled, clean it up completely and allow petroleum vapours to dissipate before starting the engine.**
- **Do not smoke or allow flames or sparks where the engine is refueled or where gasoline is stored.**
- **Exhaust gas contains poisonous carbon monoxide. Avoid inhalation of exhaust gases. Never run the engine in a closed garage or confined area.**
- **Place the engine on a stable surface. Do not tilt the engine more than 20° from horizontal. Operating at excessive angles may result in fuel spillage.**

SAFETY INSTRUCTIONS

⚠WARNING

To ensure safe operation—

- **Do not place anything on the engine, as it may create a fire hazard.**
- **A spark arrester is available as an optional part for this engine. It is illegal in some areas to operate an engine without a spark arrester. Check local laws and regulations before operating.**
- **The muffler becomes very hot during operation and remains hot for a while after stopping the engine. Be careful not to touch the muffler while it is hot. To avoid severe burns or fire hazards, let the engine cool before transporting it or storing it indoors.**

SAFETY LABEL LOCATION

This label warns you of potential hazards that can cause serious injury. Read it carefully.

If the label comes off or becomes hard to read, contact your Honda dealer for replacement.

READ OWNER'S MANUAL

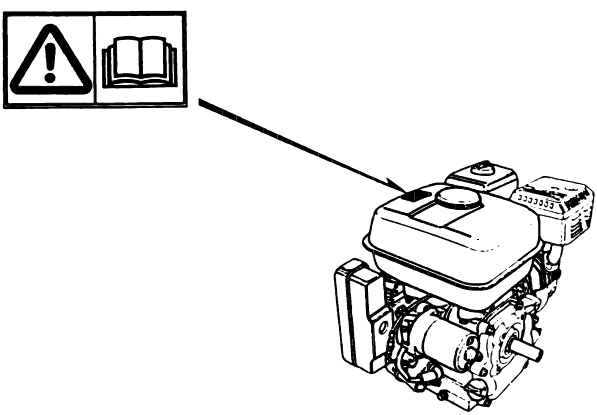

2 BATTERY CONNECTIONS (for electric starter)

Use a 12 volt battery with an ampere-hour rating of at least 18 AH.
Connect the battery positive (+) cable to the starter solenoid terminal, as shown.
Connect the battery negative (−) cable to an engine mounting bolt, frame bolt, or other good engine ground connection.
Check the battery cable connections to be sure the cables are tightened and free of corrosion. Remove any corrosion, and coat the terminals and cable ends with grease.

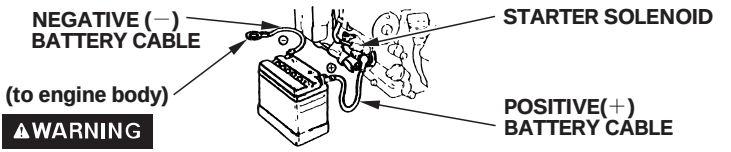

⚠WARNING

- **The battery gives off explosive gases; keep sparks, flames and cigarettes away. Provide adequate ventilation when charging or using batteries in an enclosed space.**
- **The battery contains sulfuric acid (electrolyte). Contact with skin or eyes may cause severe burns. Wear protective clothing and a face shield.**
  - **If electrolyte gets on your skin, flush with water.**
  - **If electrolyte gets in your eyes, flush with water for at least 15 minutes and call a physician immediately.**
- **Electrolyte is poisonous.**
  - **If swallowed, drink large quantities of water or milk and follow with milk of magnesia or vegetable oil and call a physician immediately.**
- **KEEP OUT OF REACH OF CHILDREN.**

NOTICE

- **Use only distilled water in the battery. Tap water will shorten the service life of the battery.**
- **Filling the battery above the UPPER LEVEL line may cause the electrolyte to overflow, resulting in corrosion to engine or nearby parts. Immediately wash off any spilled electrolyte.**
- **Be careful not to connect the battery in reverse polarity, as this will short circuit the battery charging system and trip the circuit breaker.**

3 PRE-OPERATION CHECK

1. Engine oil level

CAUTION:

- **Running the engine with insufficient oil can cause serious engine damage.**
- **Be sure to check the engine on a level surface with the engine stopped.**

1. Remove the oil filler cap and wipe the dipstick clean.
2. Insert the dipstick into the oil filler neck, but do not screw it in.
3. If the level is low, fill to the top of the oil filler neck with the recommended oil.

Use Honda 4-stroke, or an equivalent high detergent, premium quality motor oil certified to meet or exceed U.S. automobile manufacturer's requirements for service classification SG, SF. Motor oils classified SG, SF will show this designation on the container.
SAE 10W-30 is recommended for general, all temperature use. If single viscosity oil is used, select the appropriate viscosity for the average temperature in your area.

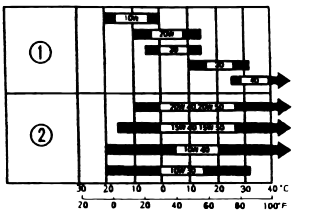

Ambient temperature

① SINGLE VISCOSITY
② MULTI VISCOSITY

CAUTION:
Using nondetergent oil or 2-stroke engine oil could shorten the engine's service life.

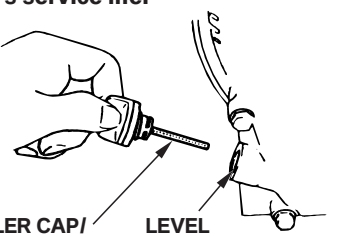

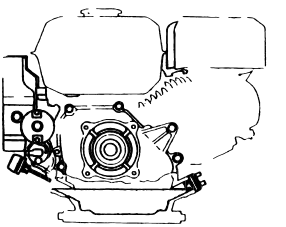

2. Reduction gear oil

Check reduction gear oil level.
Fill with SG, SF rated engine oil, if necessary.

〈**1/2 reduction with automatic centrifugal clutch**〉

1. Remove the oil filler cap and wipe the dipstick clean.
2. Insert the dipstick into the filler neck but do not screw it in.
3. If the level is low, fill to the upper level mark with the same oil recommended for the engine (see engine oil recommendations on page 6).

Oil capacity: 0.50 ℓ (0.53 US qt , 0.44 Imp qt)

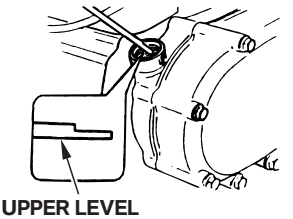

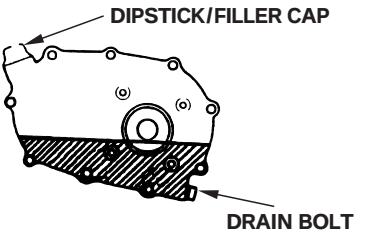

〈**1/6 reduction**〉

1. Remove the oil level bolt.
2. Check the oil level; it should reach the edge of the oil level bolt hole. If the oil level is low, remove the filler bolt, and add oil until it starts to flow out the oil level bolt hole. Use the same oil recommended for the engine (see engine oil recommendations on page 6).
3. Install the oil level bolt and filler bolt. Tighten them securely.

Oil capacity: 0.15 ℓ (0.16 US qt , 0.13 Imp qt)

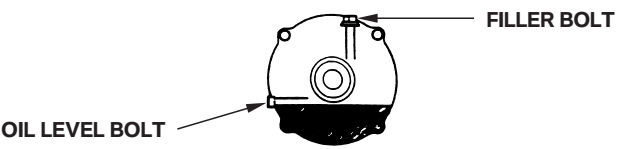

3. Air cleaner

CAUTION:

Never run the engine without the air cleaner. Rapid engine wear will result.

〈**Dual element type**〉

1. Check the air cleaner elements to be sure they are clean and in good condition.
2. Clean or replace the elements if necessary (page 21).

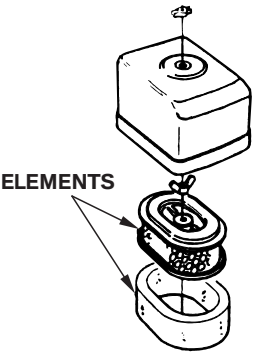

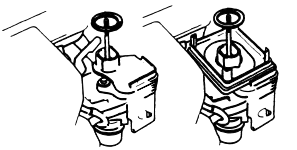

(GX120/160) (GX120/160/200)

〈**Cyclone type**〉

1. Check cleaner for dirt or obstruction of elements.
2. Check the cyclone housing for any dirt build-up, clean it, if necessary (page 22).

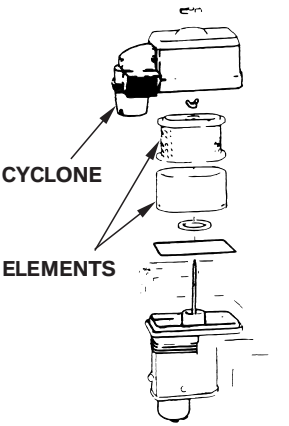

〈**Semi-dry type**〉
Check cleaner for dirt or obstruction of element (page 23).

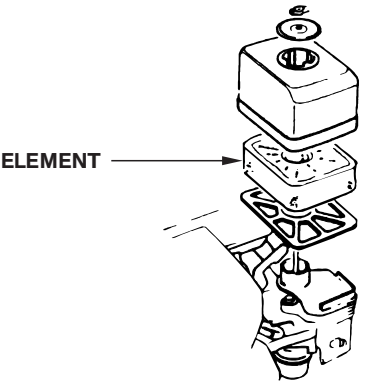

〈**Oil bath type**〉
1. Check the air cleaner element to be sure it is clean and in good condition. Clean or replace the element if necessary (page 23).
2. Check oil level and condition.

CAUTION:
Never run the engine without the air cleaner. Rapid engine wear will result.

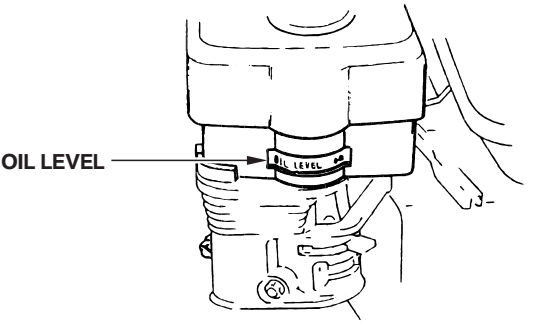

4. Fuel

Use automotive gasoline (Unleaded or lowleaded is preferred to minimize combustion chamber deposits).
FOR NEW SOUTH WALES ONLY:
Use unleaded fuel only.
Never use an oil/gasoline mixture or dirty gasoline. Avoid getting dirt, dust or water in the fuel tank.

⚠WARNING

- **Gasoline is extremely flammable and is explosive under certain conditions.**
- **Refuel in a well-ventilated area with the engine stopped. Do not smoke or allow flames or sparks in the area where the engine is refueled or where gasoline is stored.**
- **Do not overfill the fuel tank (there should be no fuel in the filler neck). After refueling, make sure the tank cap is closed properly and securely.**
- **Be careful not to spill fuel when refueling. Spilled fuel or fuel vapor may ignite. If any fuel is spilled, make sure the area is dry before starting the engine.**
- **Avoid repeated or prolonged contact with skin or breathing of vapor.**
  KEEP OUT OF REACH OF CHILDREN.

Fuel tank capacity:	GX120…	2.5 ℓ (0.66 US gal , 0.55 Imp gal)
	GX160…	3.6 ℓ (0.95 US gal , 0.79 Imp gal)
	GX200…	3.6 ℓ (0.95 US gal , 0.79 Imp gal)

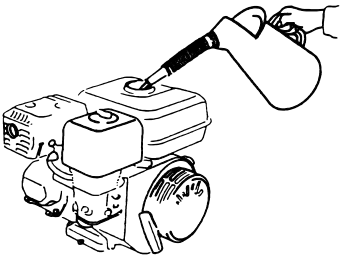

GASOLINES CONTAINING ALCOHOL

If you decide to use a gasoline containing alcohol (gasohol), be sure it's octane rating is at least as high as that recommended by Honda. There are two types of ''gasohol'': one containing ethanol, and the other containing methanol. Do not use gasohol that contains more than 10% ethanol. Do not use gasoline containing methanol (methyl or wood alcohol) that does not also contain cosolvents and corrosion inhibitors for methanol. Never use gasoline containing more than 5% methanol, even if it has cosolvents and corrosion inhibitors.

NOTE:

- Fuel system damage or engine performance problems resulting from the use of fuels that contain alcohol is not covered under the warranty. Honda cannot endorse the use of fuels containing methanol since evidence of their suitability is as yet incomplete.
- Before buying fuel from an unfamiliar station, try to find out if the fuel contains alcohol, if it does, confirm the type and percentage of alcohol used. If you notice any undesirable operating symptoms while using a gasoline that contains alcohol, or one that you think contains alcohol, switch to a gasoline that you know does not contain alcohol.

4 STARTING THE ENGINE

1. Turn the fuel valve to the ON position.

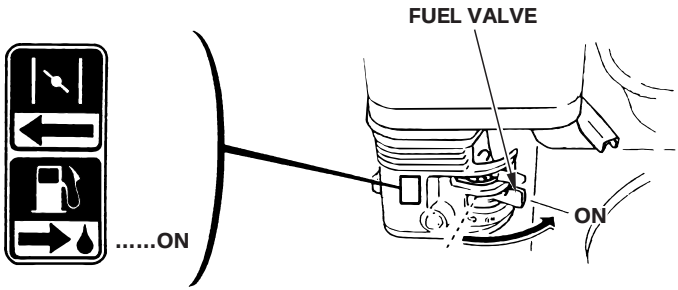

2. Move the choke lever to the CLOSED position.

NOTE:
Do not use the choke if the engine is warm or the air temperature is high.

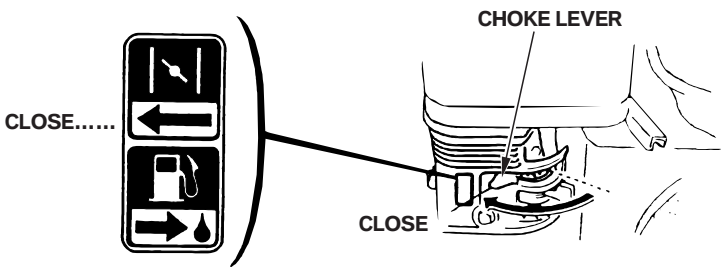

3. Move the throttle control lever slightly to the left.

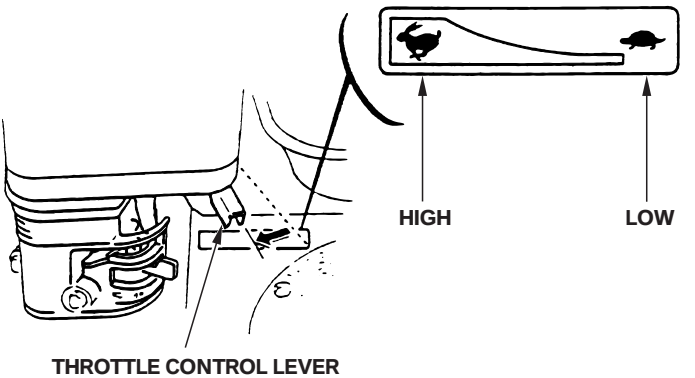

4. Start the engine.
- With recoil starter:
  Turn the engine switch to the ON position.

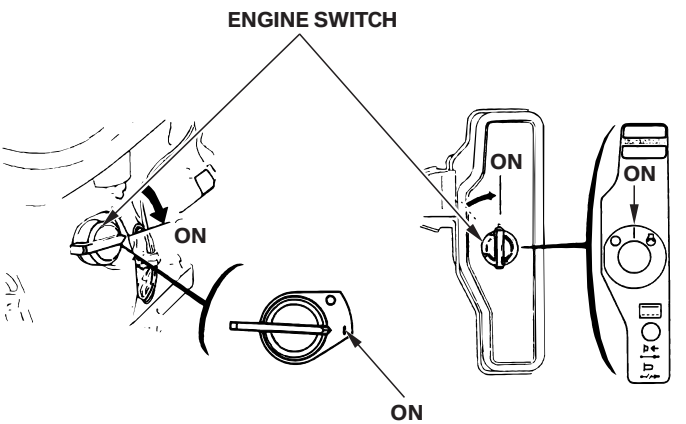

Pull the starter grip lightly until resistance is felt, then pull briskly.

CAUTION:
Do not allow the starter grip to snap back against the engine. Return it gently to prevent damage to the starter.

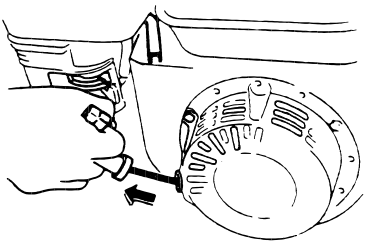

- With electric starter (where equipped):
  Turn the engine switch to the START position and hold it there until the engine starts.

NOTE:
Do not use the electric starter for more than 5 seconds at a time. If the engine fails to start, release the key and wait 10 seconds before operating the starter again.

When the engine starts, return the switch to the ON position.

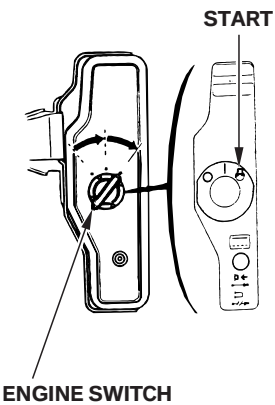

- **High altitude operation**

At high altitude, the standard carburetor air-fuel mixture will be excessively rich. Performance will decrease, and fuel consumption will increase.

High altitude performance can be improved by specific modifications to the carburetor. If you always operate the engine at altitudes higher than 1,830 m (6,000 feet) above sea level, have your authorized Honda dealer perform these carburetor modifications.

Even with suitable carburetor jetting, engine horsepower will decrease approximately 3.5% for each 305 m (1,000 feet) increase in altitude. The affect of altitude on horsepower will be greater than this if no carburetor modification is made.

CAUTION:

Operation of the engine at an altitude lower than the carburetor is jetted for may result in reduced performance, overheating, and serious engine damage caused by an excessively lean air/fuel mixture.

5 OPERATION

1. As the engine warms up, gradually move the choke lever to the OPEN position.

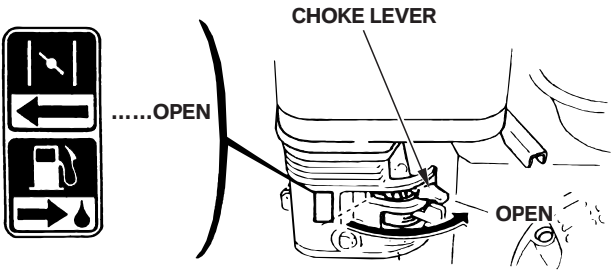

2. Position the throttle control lever for the desired engine speed.

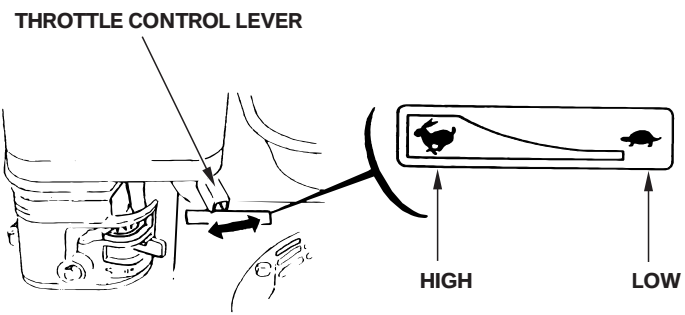

Oil alert system (Where equipped)
The Oil Alert System is designed to prevent engine damage caused by an insufficient amount of oil in the crankcase. Before the oil level in the crankcase can fall below a safe limit, the Oil Alert System will automatically stop the engine (the engine switch will remain in the ON position).

NOTICE

If the engine stops and will not restart, check the engine oil level (page 6) before troubleshooting in other areas.

Circuit breaker (for electric starter)
The circuit breaker protects the battery charging circuit. A short circuit or a battery connected in reverse polarity will trip the circuit breaker.

The green indicator inside the circuit breaker will pop out to show that the circuit breaker has switched off. If this occurs, determine the cause of the problem, and correct it before resetting the circuit breaker.

Push the circuit breaker button to reset.

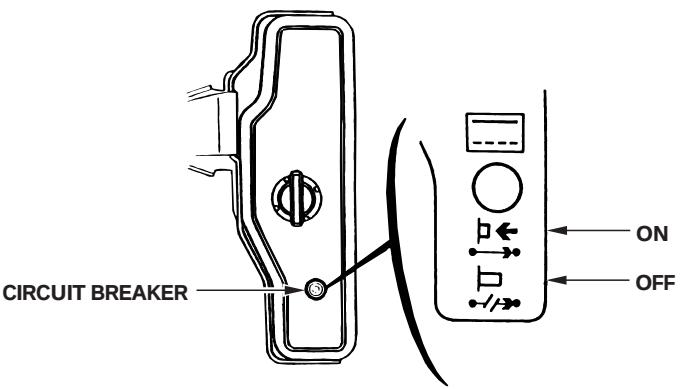

6 STOPPING THE ENGINE

To stop the engine in an emergency, turn the engine switch to the OFF position. Under normal conditions, use the following procedure:

1. Move the throttle control lever fully to the right.

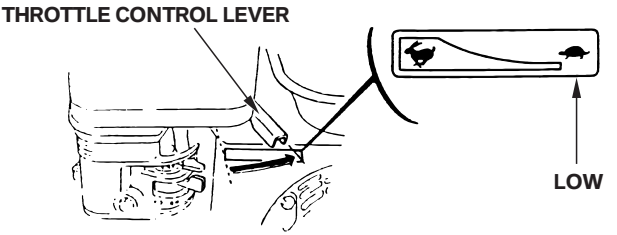

2. Turn the engine switch to the OFF position.

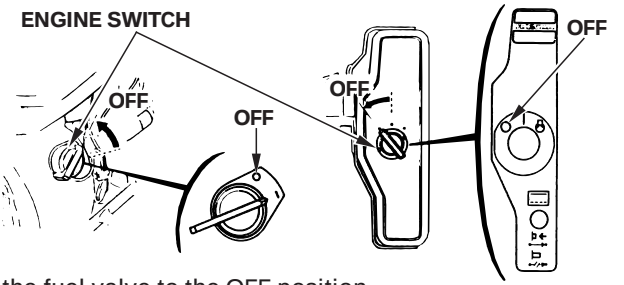

3. Turn the fuel valve to the OFF position.

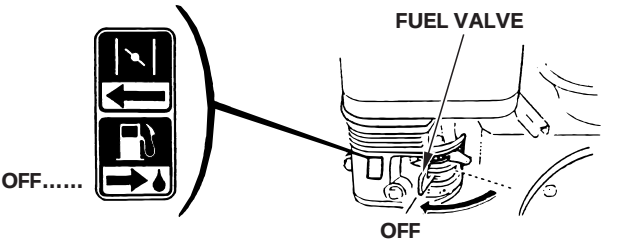

7 MAINTENANCE

⚠WARNING

- **Shut off the engine before performing any maintenance.**
- **To prevent accidental start-up, turn OFF the engine switch key and disconnect the spark plug cap.**
- **The engine should be serviced by an authorized Honda dealer unless the owner has proper tools and service data and feels he is mechanically qualified.**

CAUTION:

Use only genuine Honda parts or their equivalent. The use of replacement parts which are not of equivalent quality may damage the engine.

Periodic inspection and adjustment of the Honda engine is essential if high level performance is to be maintained. Regular maintenance will also ensure a long service life. The required service intervals and the kind of maintenance to be performed are described on the table below.

Maintenance Schedule

REGULAR SERVICE PERIOD Performed at every indicated month or operating hour interval, whichever comes first. ITEM		Each use	First month or 20 Hrs.	Every 3 month or 50 Hrs.	Every 6 month or 100 Hrs.	Every year or 300 Hrs.
Engine oil	Check level	○				
	Change		○		○	
Reduction gear oil (applicable models only)	Check level	○				
	Change		○			○
Air cleaner	Check	○				
	Clean			○(1)		
Sediment cup	Clean				○	
Spark plug	Check－Clean				○	
Spark arrester (optional part)	Clean				○	
Valve clearance	Check－Adjust					○(2)
Fuel tank and strainer	Clean					○(2)
Fuel line	Check (Replace if necessary)	Every 2 years (2)				

NOTE: (1): Service more frequently when used in dusty areas.

(2): These items should be serviced by an authorized Honda dealer, unless the owner has the proper tools and is mechanically proficient. See the Honda Shop Manual.

1. Oil change

Drain the oil while the engine is still warm to assure rapid and complete draining.

1. Remove the oil filler cap and drain plug to drain the oil.
2. Install the drain plug, and tighten it securely.
3. Refill with the recommended oil (see page 6) and check the oil level.
4. Install the oil filler cap.

ENGINE OIL CAPACITY: 0.60 ℓ (0.63 US qt , 0.53 Imp qt)

1/2 REDUCTION GEAR OIL CAPACITY:
0.50 ℓ (0.53 US qt , 0.44 Imp qt)

1/6 REDUCTION GEAR OIL CAPACITY:
0.15 ℓ (0.16 US qt , 0.13 Imp qt)

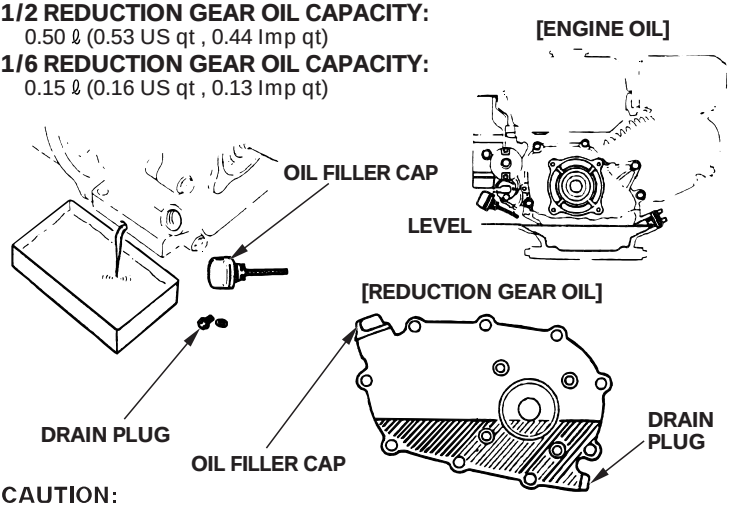

CAUTION:
Used motor oil may cause skin cancer if repeatedly left in contact with the skin for prolonged periods. Although this is unlikely unless you handle used oil on a daily basis, it is still advisable to thoroughly wash your hands with soap and water as soon as possible after handling used oil.

NOTE:
Please dispose of used motor oil in a manner that is compatible with the environment. We suggest you take it in a sealed container to your local service station for reclamation. Do not throw it in the trash, pour it on the ground, or down a drain.

2. Air cleaner service

A dirty air cleaner will restrict air flow to the carburetor. To prevent carburetor malfunction, service the air cleaner regularly. Service more frequently when operating the engine in extremely dusty areas.

⚠WARNING

Never use gasoline or low flash point solvents for cleaning the air cleaner element. A fire or explosion could result.

CAUTION:

Never run the engine without the air cleaner. Rapid engine wear will result.

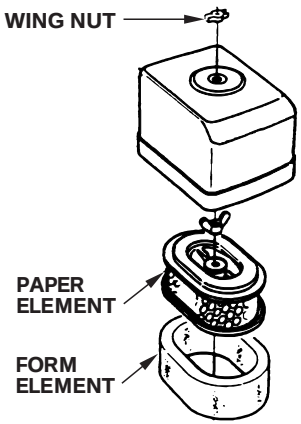

〈**Dual element type**〉

1. Remove the wing nut and the air cleaner cover. Remove the elements and separate them. Carefully check both elements for holes or tears and replace if damaged.
2. Foam element: Wash the element in a solution of household detergent and warm water, then rinse thoroughly, or wash in nonflammable or high flash point solvent. Allow the element to dry thoroughly.
   Soak the element in clean engine oil and squeeze out the excess oil. The engine will smoke during initial start-up if too much oil is left in the foam.
3. Paper element: Tap the element lightly several times on a hard surface to remove excess dirt, or blow compressed air through the filter from the inside out. Never try to brush the dirt off; brushing will force dirt into the fibers. Replace the paper element if it is excessively dirty.

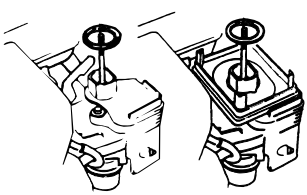

(GX120/160) (GX120/160/200)

〈**Cyclone type**〉

1. Remove the wing nut and the air cleaner cover. Remove the elements and separate them. Carefully check both elements for holes or tears and replace if damaged.
2. Foam element: Clean in warm soapy water, rince and allow to dry thoroughly. Or clean in high flash-point solvent and allow to dry. Dip the element in clean engine oil and squeeze out all the excess. The engine will smoke during initial start-up if too much oil is felt in the foam.

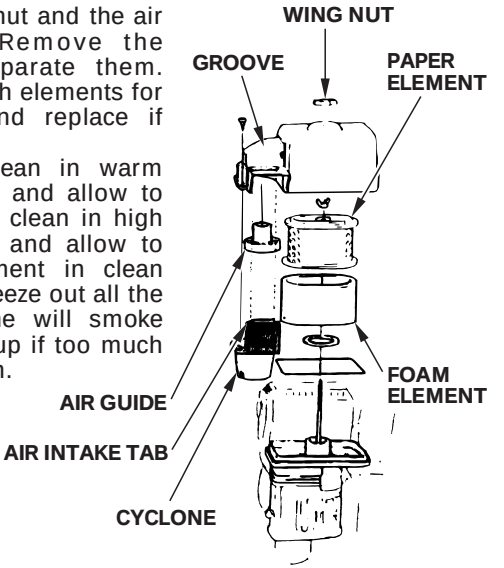

3. Paper element: Tap the element lightly several times on a hard surface to remove excess dirt, or blow compressed air through the filter from the inside out. Never try to brush the dirt off; brushing will force dirt into the fibers. Replace the paper element if it is excessively dirty.

(Cleaning the cyclone housing)

1. When the cyclone housing becomes dirty, unscrew the three special pan screws and wipe or wash the components with water. Next, thoroughly dry the components and carefully reassemble them.

CAUTION:

- **When reinstalling the cyclone, ensure that the tab on the air intake fits properly into the groove in the pre-cleaner cap.**
- **Be careful to install the air guide in the proper direction.**

〈**Semi-dry type**〉

1. Unscrew the wing nut, remove the air cleaner cover and remove the element.
2. Wash the element in a nonflammable or high flash point solvent and dry it thoroughly.
3. Soak the element in clean engine oil and squeeze out the excess oil.
4. Reinstall the air cleaner element and the cover.

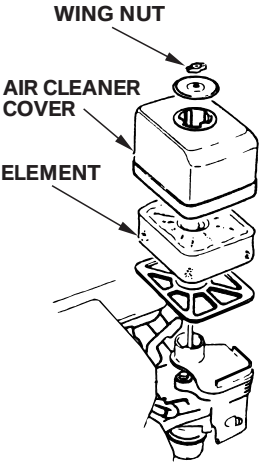

〈**Oil bath type**〉

1. Unscrew the wing nut, remove the air cleaner cover and remove the element.
2. Wash the element in a solution of household detergent and warm water, then rinse thoroughly, or wash in non-flammable or high flash point solvent. Allow the element to dry thoroughly.
3. Soak the element in clean engine oil and squeeze out the excess oil. The engine will smoke during intial start-up if too much oil is left in the element.
4. Empty the oil from the air cleaner case and wash out any accumulated dirt with nonflammable or high flash point solvent. Dry the case.
5. Fill the air cleaner case to the level mark with the same oil that is recommended for the engine (see engine oil recommendations on page 6).
6. Reinstall the element and the cover.

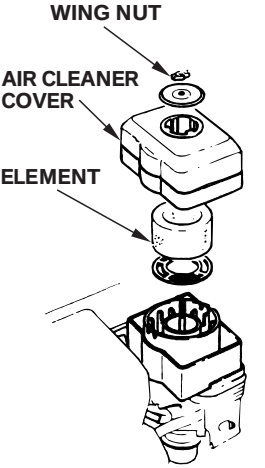

3. Sediment cup cleaning

⚠WARNING

- **Gasoline is extremely flammable and is explosive under certain conditions. Do not smoke or allow flames or sparks in the area.**
- **After installing the sediment cup, check for leaks, and make sure the area is dry before starting the engine.**

Turn the fuel valve to OFF. Remove the sediment cup and O-ring, and wash them in nonflammable or high flash point solvent. Dry them thoroughly and reinstall securely. Turn the fuel valve ON and check for leaks.

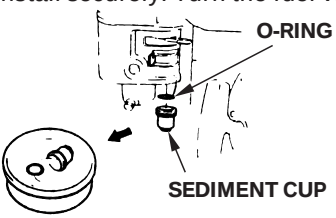

4. Spark plug service

Recommended spark plug: BPR6ES (NGK)
W20EPR-U (DENSO)

CAUTION:
Never use a spark plug of incorrect heat range.

To ensure proper engine operation, the spark plug must be properly gapped and free of deposits.

1. Remove the spark plug cap and use the proper size spark plug wrench to remove the spark plug.

⚠WARNING

If the engine has been running, the muffler will be very hot. Be careful not to touch the muffler.

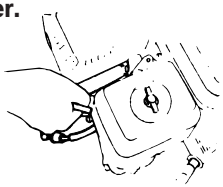

2. Visually inspect the spark plug. Discard the spark plug if there is apparent wear, or if the insulator is cracked or chipped. Clean the spark plug with a wire brush if it is to be reused.
3. Measure the plug gap with a feeler gauge. Correct as necessary by bending the side electrode.
   The gap should be:
   0.70－0.80 mm (0.028－0.031 in)

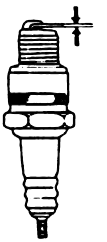

4. Check that each spark plug washer is in good condition, and thread the spark plug in by hand to prevent cross-threading.
5. After the spark plug is seated, tighten with a spark plug wrench to compress the washer.

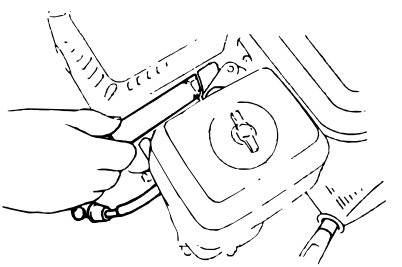

NOTE:
When installing a new spark plug, tighten 1/2 turn after the spark plug seats to compress the washer. When reinstalling a used spark plug, tighten 1/8－1/4 turn after the spark plug seats to compress the washer.

CAUTION:
The spark plug must be securely tightened. An improperly tightened spark plug can become very hot and may damage the engine.

5. Spark arrester maintenance (optional part)

⚠WARNING

If the engine has been running, the muffler will be very hot. Allow it to cool before proceeding.

CAUTION:

The spark arrester must be serviced every 100 hours to maintain its efficiency.

1. Remove the two 4 mm screws from the exhaust deflector, and remove the deflector.
2. Remove the four 5 mm screws from the muffler protector, and remove the muffler protector.
3. Remove the two 4 mm screw from the spark arrester, and remove the spark arrester from the muffler.

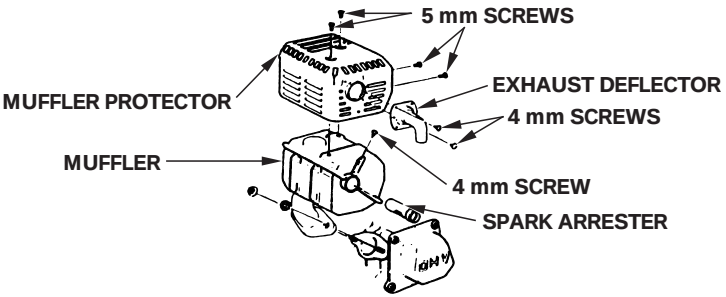

4. Use a brush to remove carbon deposits from the spark arrester screen.

CAUTION:

Be careful not to damage the spark arrester screen.

NOTE:

The spark arrester must be free of breaks and holes. Replace, if necessary.

5. Install the spark arrester and the muffler in the reverse order of disassembly.

6. Carburetor idle speed adjustment

1. Start the engine and allow it to warm up to normal operating temperature.
2. With the engine idling, turn the throttle stop screw to obtain the standard idle speed.

Standard idle speed: $1{,}400 \pm {}^{200}_{150}$ rpm.

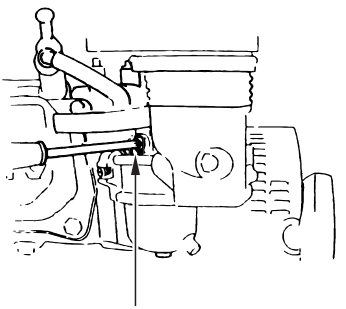

8 THROTTLE AND CHOKE CONTROL CABLE (optional part)

The throttle and choke control levers are provided with holes for optional cable attachment. The following illustrations show installation examples for a solid wire cable and for a braided wire cable. If using a braided wire cable, add a return spring as shown. It is necessary to loosen the throttle lever friction nut when operating the throttle with a remote cable.

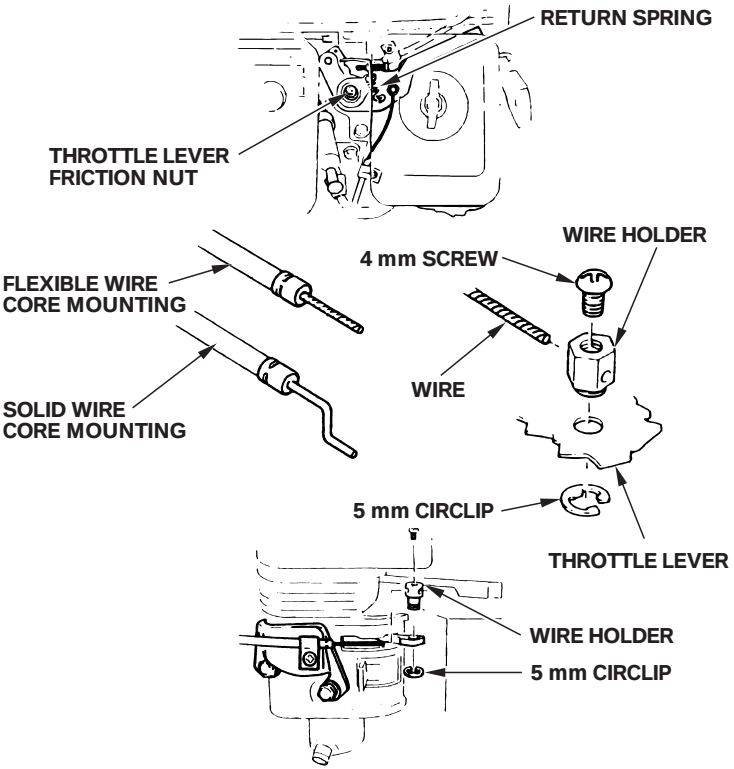

9 TRANSPORTING/STORAGE

⚠WARNING

When transporting the engine, turn the fuel valve OFF and keep the engine level to prevent fuel spillage. Fuel vapor or spilled fuel may ignite.

Befor storing the unit for an extended period;

1. Be sure the storage area is free of excessive humidity and dust.
2. Drain the fule…

⚠WARNING

Gasoline is extremely flammable and is explosive under certain conditions. Do not smoke or allow flames or sparks in the area.

a. With the fuel valve in the OFF position, remove and empty the sediment cup.
b. Turn the fuel valve to the ON position and drain the gasoline from the fuel tank into a suitable container.
c. Replace the sediment cup and tighten securely.
d. Drain the carbretor by loosening the drain screw. Drain the gasoline into a suitable container.

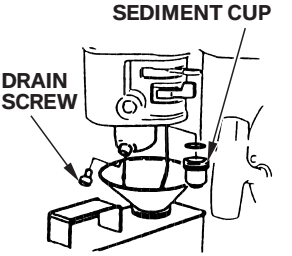

3. Change the engine oil (page 20).
4. Remove the spark plug and pour about a tablespoon of clean engine oil into the cylinder.
   Crank the engine several revolutions to distribute the oil, then reinstall the spark plug.
5. Pull the starter rope slowly until resistance is felt.Continue polling until the notch on the starter pulley aligns with the hole on the recoil starter (see illustration below). At this point, the intake and exhaust valves are closed, and this will help to protect the engine from internal corrosion.

Align the mark on the starter pulley with the hole at the top of recoil starter.

6. Electric starter type: Remove the battery and store it in a cool;, dry place. Recharge it once a month.
7. Cover the engine to keep out dust.

10 TROUBLESHOOTING

Engine will not start using recoil starter:
1. Is the engine switch in the ON position?
2. Is there enough oil in the engine?
3. Is the fuel valve ON?
4. Is there fuel in the fuel tank?
5. Is gasoline reaching the carburetor?
   To check,loosen the drain screw with the fuel valve ON?

⚠WARNING

If any fuel is spilled, make sure the area is dry before testing the spark plug or starting the engine. Fuel vapor or spilled fuel may ignite.

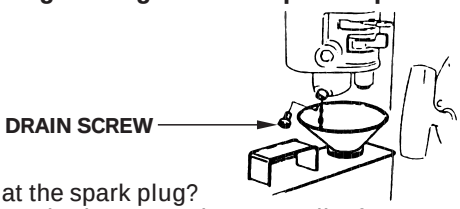

6. Is there a spark at the spark plug?
   a. Remove the spark plug cap. Clean any dirt from around the spark plug base, then remove the spark plug.
   b. Install the spark plug in the plug cap.
   c. Turn the engine switch ON.
   d. Grounding the side electrode to any engine ground, pull the recoil starter to see if sparks jump across the gap.
   e. If there is no spark, replace the plug.
      If OK, reinstall the spark plug and try to start the engine again according to the instructions.
7. If the engine still dose not start, take the engine to an authorized Honda dealer.

Engine will not start, using electric starter:
1. Are the battery cables securely connected and free of corrosion?
2. Is the battery fully charged?

NOTE:
If the engine does not charge the battery, check the circuit breaker.
3. If the starter motor operates, but the engine wil not start, follow the troubleshooting procedure described under recoil starter operation.

11 SPECIFICATIONS

*Dimensions	GX 120	GX 160	GX 200
Power equipment description code	GC01	GC02	GCAE
Length	300 mm (11.8 in)	305 mm (12.0 in)	313 mm (12.3 in)
Width	345 mm (13.6 in)	365 mm (14.4 in)	376 mm (14.8 in)
Height	320 mm (12.6 in)	335 mm (13.2 in)	335 mm (13.2 in)
〈 Length 〉		〈305 mm (12.0 in)〉	〈313 mm (12.3 in)〉
〈 Width 〉		〈385 mm (15.2 in)〉	〈395 mm (15.6 in)〉
〈 Height 〉		〈335 mm (13.2 in)〉	〈335 mm (13.2 in)〉
Dry weight	12.0 kg (26.5 lbs)	14.0 kg (30.9 lbs)	16.0 kg (35.3 lbs)
		〈16.0 kg (35.3 lbs)〉	〈17.9 kg (39.5 lbs)〉

〈 〉: Electric starter model

Engine

Engine type	4-stroke, over head valve, 1 cylinder		
Displacement	118 cm^3 (7.2 cu-in)	163 cm^3 (9.9 cu-in)	196 cm^3 (12.0 cu-in)
Bore×Stroke	60 x 42 mm (2.4 x 1.7 in)	68 x 45 mm (2.7 x 1.8 in)	68 x 54 mm (2.7 x 2.1 in)
Max. output	2.9 kW/4,000 rpm	4 kW/4,000 rpm	4.8 kW/3,600 rpm
Max. torque	0.75 kg-m (5.4 ft-lb)/ 2,500 rpm	1.1 kg-m (8.0 ft-lb)/ 2,500 rpm	1.35 kg-m (9.8 ft-lb)/ 2,500 rpm
Fuel consumption	230 g/PSh		
Cooling system	Forced air		
Ignition system	Transister magneto		
PTO shaft rotation	Counterclockwise		

*: ''S''type

NOTE:
Specifications may vary according to the types, and are subject to change without notice.

With cyclone air cleaner

*Dimensions	GX 120	GX 160	GX 200
Power equipment description code	GC01	GC02	GCAE
Length	310 mm (12.2 in)	345 mm (13.6 in)	313 mm (12.3 in)
Width	410 mm (16.1 in)	420 mm (16.5 in)	430 mm (16.9 in)
Height	325 mm (12.8 in)	335 mm (13.2 in)	335 mm (13.2 in)
Dry weight	12.0 kg (26.5 lbs)	14.0 kg (30.9 lbs)	16.0 kg (35.3 lbs)

Engine

Engine type	4-stroke, over head valve, 1 cylinder		
Displacement	118 cm^3 (7.2 cu-in)	163 cm^3 (9.9 cu-in)	196 cm^3 (12.0 cu-in)
Bore×Stroke	60 x 42 mm (2.4 x 1.7 in)	68 x 45 mm (2.7 x 1.8 in)	68 x 54 mm (2.7 x 2.1 in)
Max. output	2.9 kW/4,000 rpm	4 kW/4,000 rpm	4.8 kW/3,600 rpm
Max. torque	0.75 kg-m (5.4 ft-lb)/ 2,500 rpm	1.1 kg-m (8.0 ft-lb)/ 2,500 rpm	1.35 kg-m (9.8 ft-lb)/ 2,500 rpm
Fuel consumption	230 g/PSh		
Cooling system	Forced air		
Ignition system	Transister magneto		
PTO shaft rotation	Counterclockwise		

*: ''S''type

NOTE:
Specifications may vary according to the types, and are subject to change without notice.

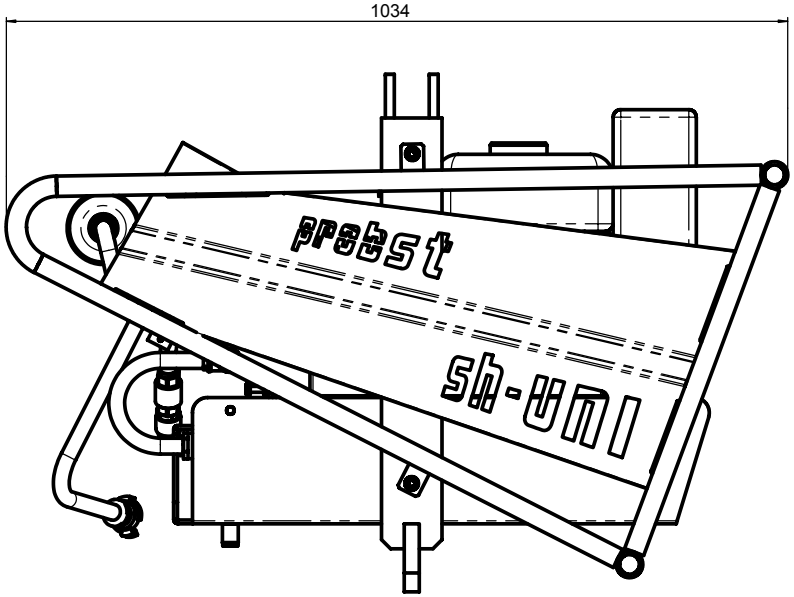

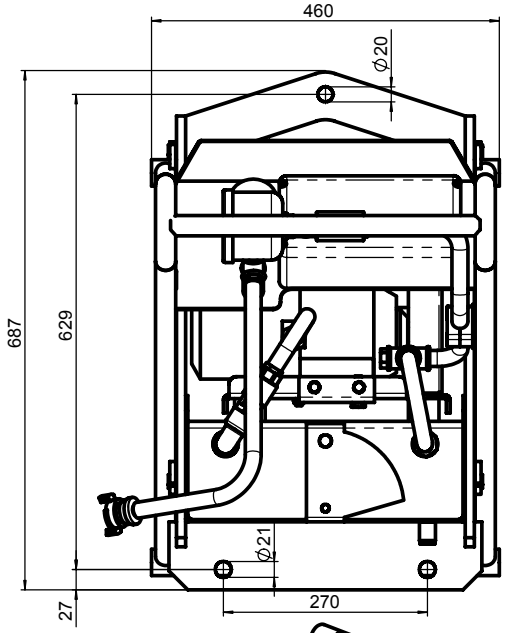

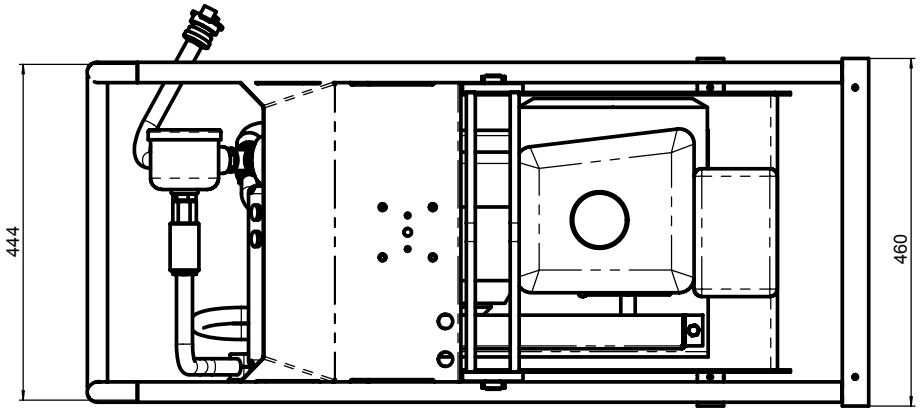

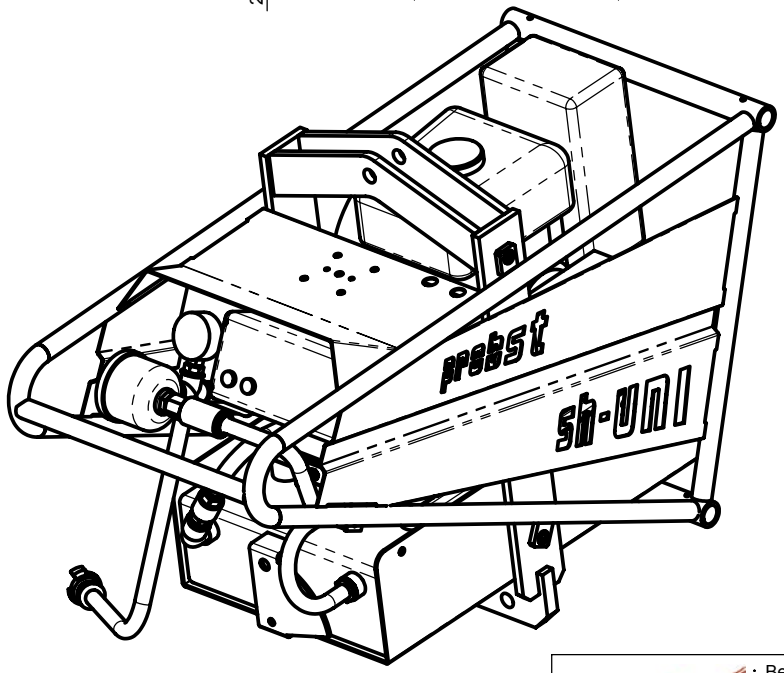

Tragkraft 2500 kg
Carrying Capacity 2500 kg

· Bei Änderungungen Rücksprache TB !

Gewicht: 99,3 kg

	Datum	Name
Erstellt	14.4.2003	Hurth
Gepr.		

Benennung
Vakuumgerät SH-Uni 2500
mit Benzinmotor
Vacuum Lifting Device SH-uni 2500 with Petrol Engine

WA:
Kunde:
Artikelnummer/Zeichnungsnummer
Blatt 1 von 1

Zust. | Urspr. | Ers. f. | Ers. d.

Ersatz- und Verschleißteile/
Spare and consumable parts/
Pièces de rechangeet d'usure

SH 2500 uni b

probst handling equipment

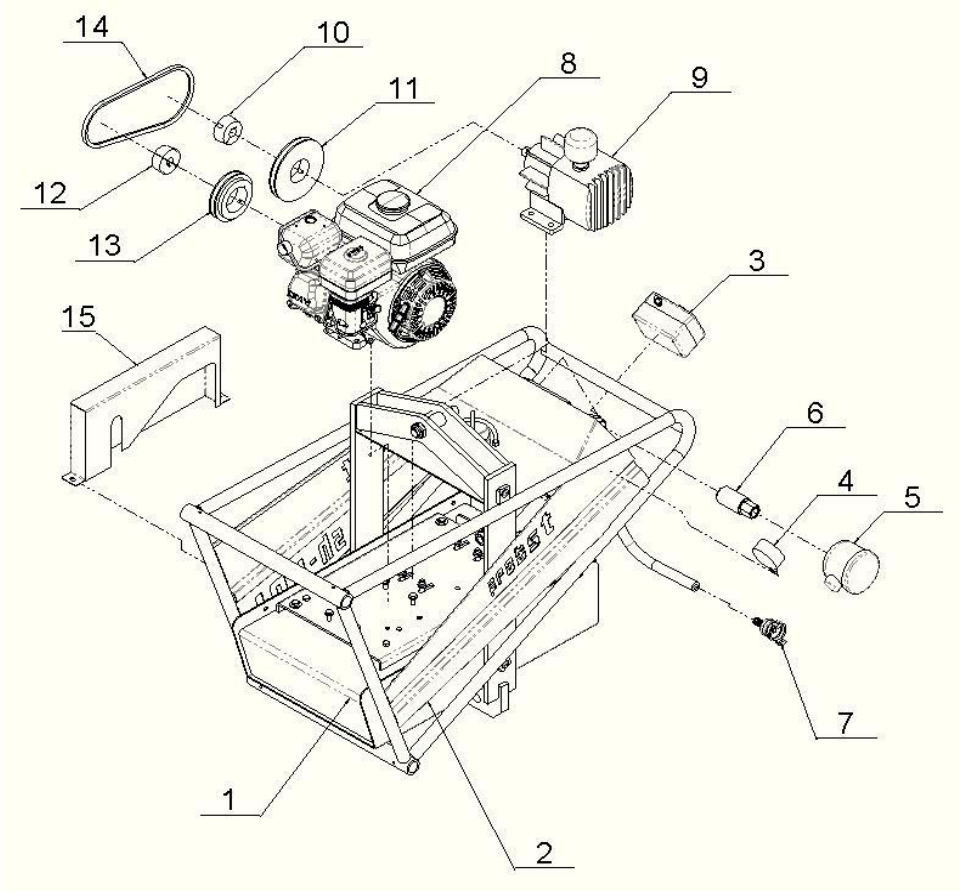

Für dieses Gerät übernehmen wir eine Gewährleistung gemäß unseren allgemeinen Verkaufs- und Lieferbedingungen.
Das gleiche gilt für Ersatzteile, sofern es sich um von uns gelieferte Originalteile handelt.
Für Schäden, die durch die Verwendung von anderen als Originalersatzteilen oder Originalzubehör entstehen, ist jegliche Haftung unsererseits ausgeschlossen. Ausgenommen von der Gewährleistung sind alle Verschleißteile.

This equipment is guaranteed in accordance with our General Conditions of Business.
This also applies to spare parts where these are original parts supplied by us.
We will assume no liability for damage caused by the use of non-original spare parts and accessories. Wear and consumable parts are not covered by the guarantee.

Nous assumerons pour cet appareil une prestation de garantie conformément à nos Conditions Générales de Livraison et de Vente.
Ceci s'applique également aux pièces de rechange dans la mesure où il s'agira de pièces d'origine que nous aurons livrées.
Nous déclinons toute responsabilité pour les dommages qui résulteraient de l'utilisation de pièces de rechange ou d'accessoires qui ne sont pas d'origine. Toutes les pièces d'usure sont exclues de la garantie.

Pos.	Bezeichnung	Art.-Nr.	Legende
1	Grundgestell / base frame / châssis	4240.0091	
2	Rahmen / frame / cadre	4240.0358	
3	Warneinrichtung / Warning equipment / Dispositif d'avertissement	4250.0190	E
	Batterie 1,5 V für Warneinrichtung (2 Stück pro Warneinrichtung) / 1,5V battery for warning equipment (2 per warning device) / Pile 1,5 V pour dispositif d'avertissement (2 par dispositif)	2420.0122	V
4	Vakuum-Manometer / Vacuum gauge / Vacuomètre	2213.0008	E
5	Vakuumfilter ¾"/ Vacuum filter ¾"/ Filtre à vide ¾"	4250.0121	E
	Filtereinsatz für STF ¾" / Filter insert for STF ¾" / Cartouche de filtre pour STF ¾"	4250.0120	V
6	Handschiebeventil / Manual sliding valve / Soupape coulissante manuelle	2307.0010	E
7	Kupplung ½-Zoll / ½" coupler / Raccord ½ de pouce	2322.0008	E
8	Benzinmotor Honda (Details siehe Anlage) / Gasoline engine Honda (see Appendix for details) / Moteur à essence Honda (détails en annexe)	2610.0007	E
	Luftfiltereinsatz für Honda GX120 / air filter element for Honda GX120 / filtre à air pour Honda GX120	2500.0029	V
9	Vakuumpumpe TFK 12/ Vacuum pump TFK 12 / Pompe à vide TFK 12	2530.0021	E
10	Taperspannbuchse Ø 19 mm, Tapered locking bushing with 19mm Ø, Douille de serrage en queue de rat, Ø 19 mm / Paßfeder, Fitted key, clavette de 6 DIN 6886	2141.0004/ 2175.0005	E
11	Keilriemenscheibe 132 mm / V-belt wheel, 132 mm / Poulie de courroie trapézoïdale 132 mm	2111.0014	E
12	Taperspannbuchse Ø 18 mm, Tapered locking bushing with 18 mm Ø, Douille de serrage en queue de rat, Ø 18 mm /Paßfeder, Fitted key, clavette 5 DIN 6886	2141.0005/ 2175.0006	E
13	Keilriemenscheibe 100 mm / V-belt wheel, 100 mm / Poulie de courroie trapézoïdale 100 mm	2111.0013	E
14	Schmalkeilriemen 9,7 x 800 mm / Narrow V-belt, 9.7 x 800 mm / Courroie trapézoïdale étroite 9,7 x 800 mm	2110.0002	V
15	Keilriemenschutz / V-belt protection / protection pour courroie trapézoïdale	2110.0007	E

E= **E**rsatzteil, Spare part, Pièce de rechange **V**= **V**erschleißteil, Consumable part, Pièce d'usure

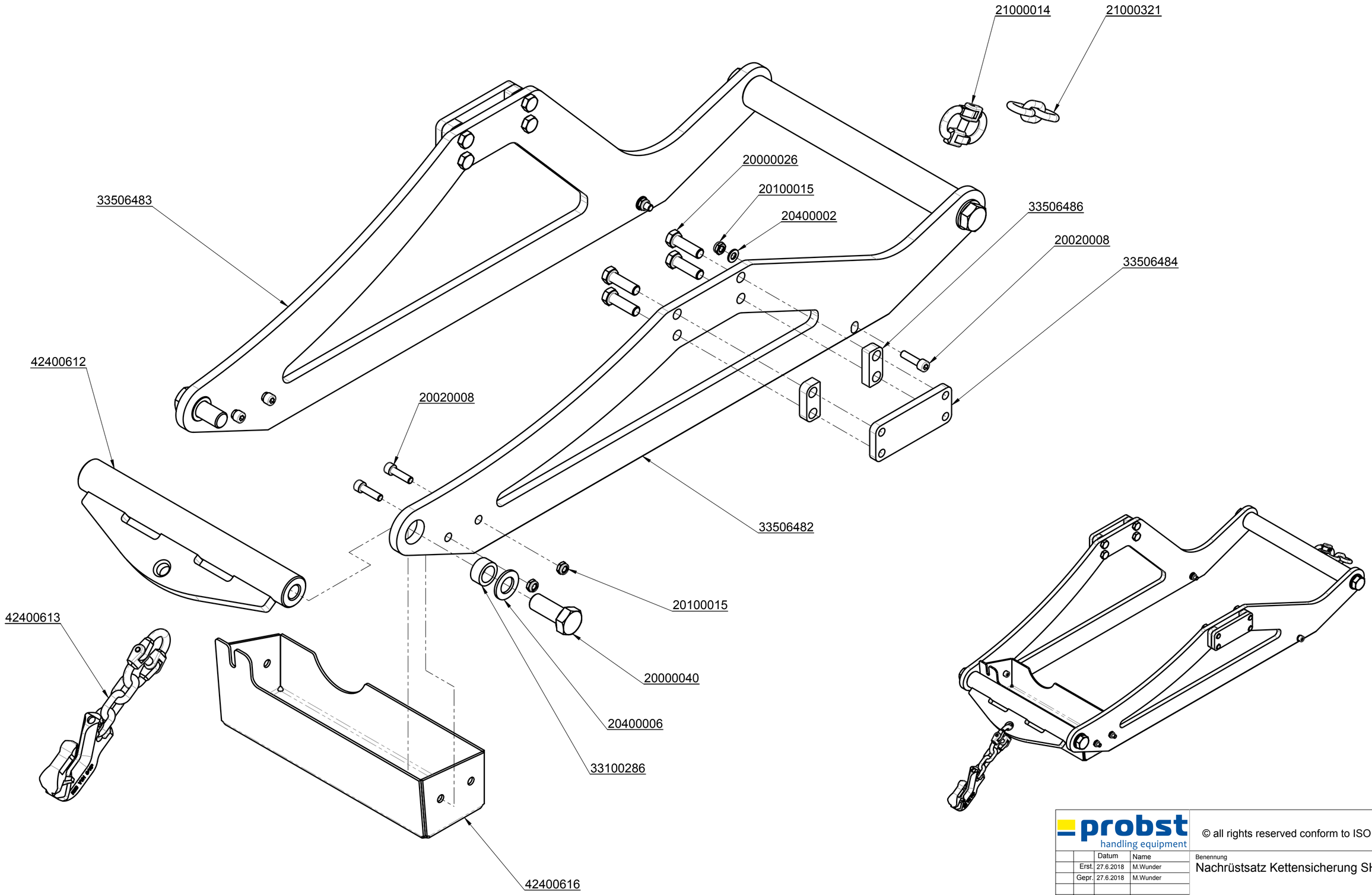

probst handling equipment

		Datum	Name
	Erst.	27.6.2018	M.Wunder
	Gepr.	27.6.2018	M.Wunder

Benennung
Nachrüstsatz Kettensicherung SH2500

Artikelnummer/Zeichnungsnummer
E42400611

Blatt 1 von 1

Zust. | Urspr. | Ers. f. | Ers. d.

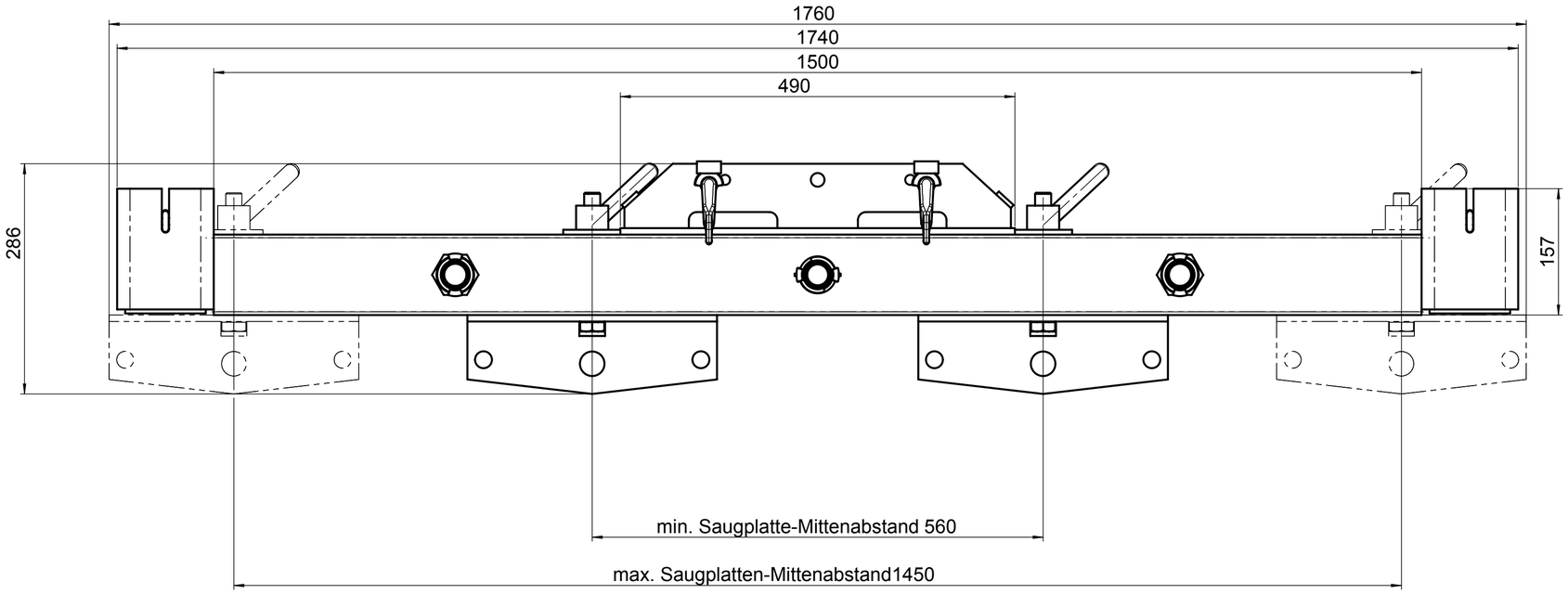

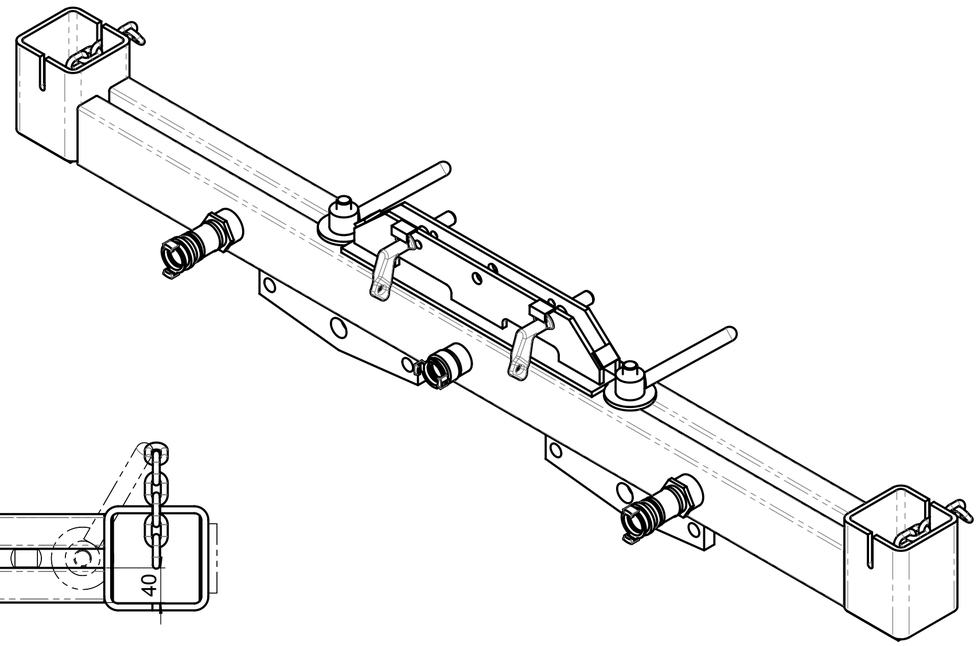

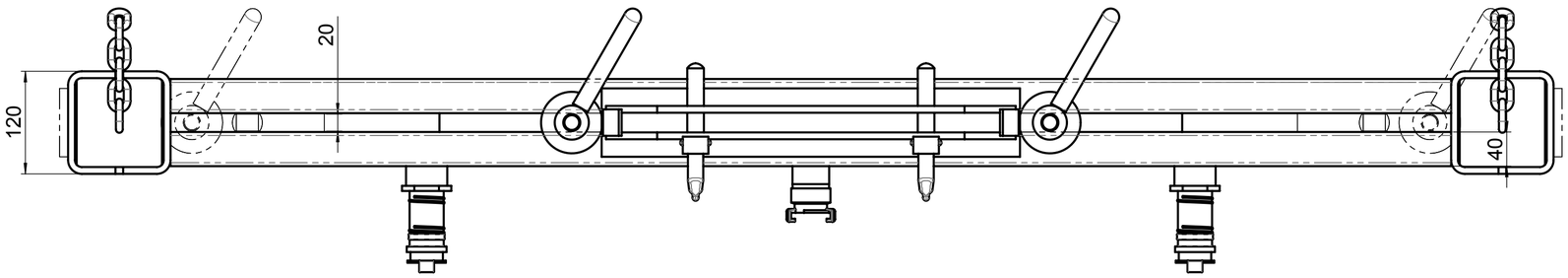

Spreader bar 3500 for SH/VPM/PJ
Applicable for 2 SPS suction plates
spreading distance 560 - 1450 mm.
Suction plates are 90° turnable.

probst handling equipment

		Datum	Name
	Erst.	21.3.2016	M.Wunder
	Gepr.	7.4.2016	M.Wunder

Benennung
Traverse SH-TRA-3500, L=1740

verschiebbar, für 2 Saugplatten, Mittenabs. 560-1450 mm

Artikelnummer/Zeichnungsnummer
D42500260

Blatt 1 von 1

Zust. Urspr. V020-301 | Ers. f. | Ers. d.

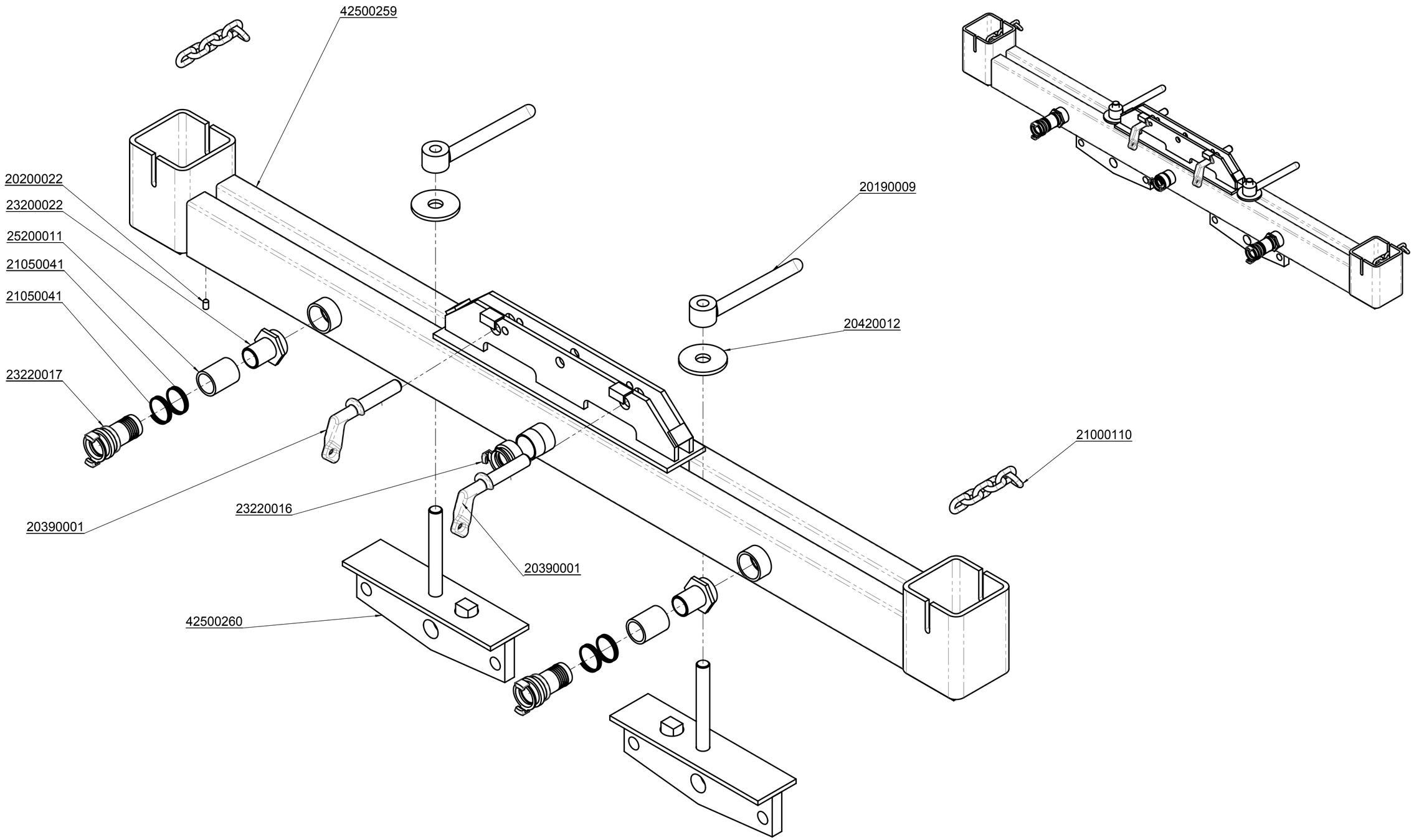

probst handling equipment

		Datum	Name
	Erst.	21.3.2016	M.Wunder
	Gepr.	7.4.2016	M.Wunder

Benennung

Traverse SH-TRA-3500, L=1740

verschiebbar, für 2 Saugplatten, Mittenabs. 560-1450 mm

Artikelnummer/Zeichnungsnummer

E42500260

Blatt 1 von 1

Zust. Urspr. V020-301 | Ers. f. | Ers. d.

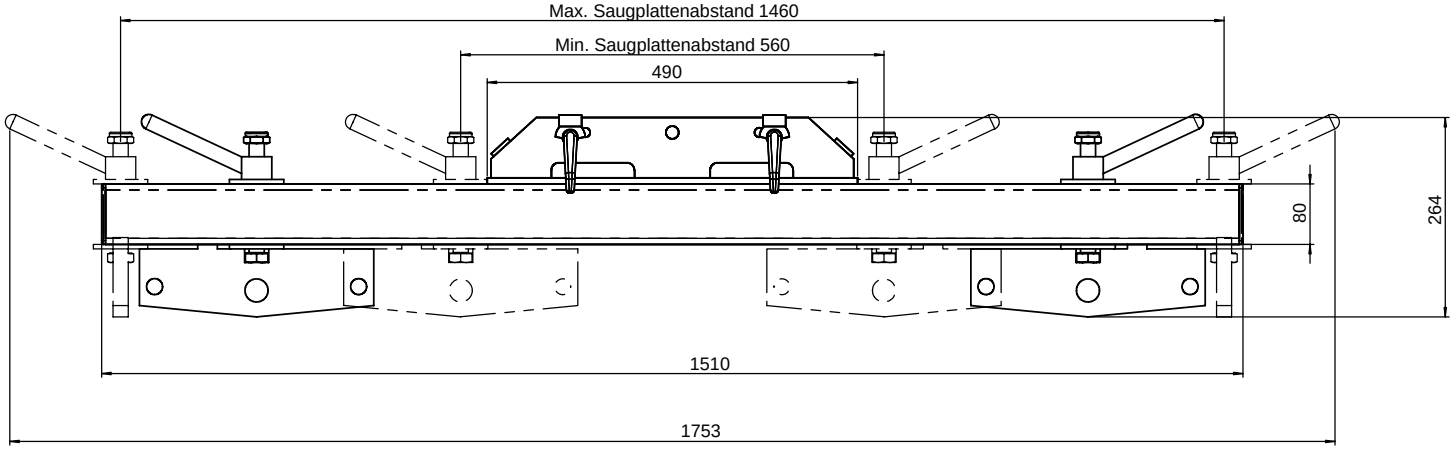

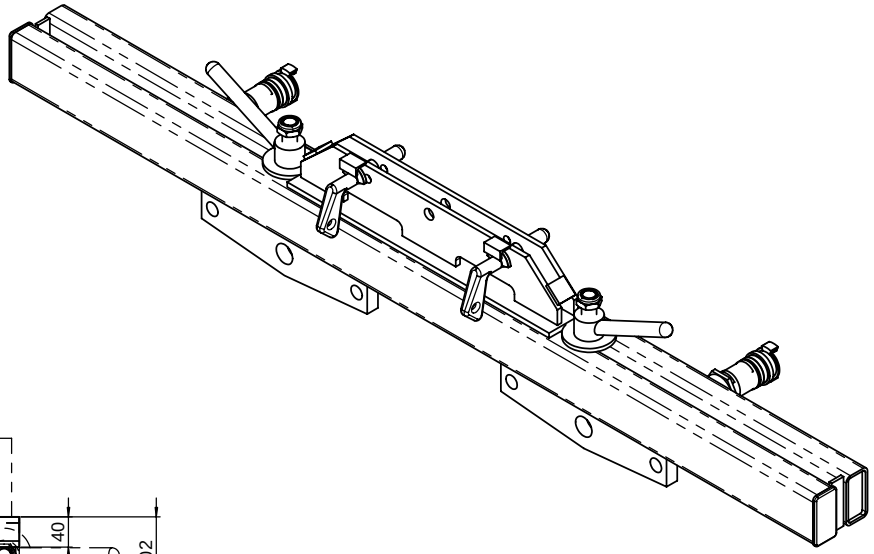

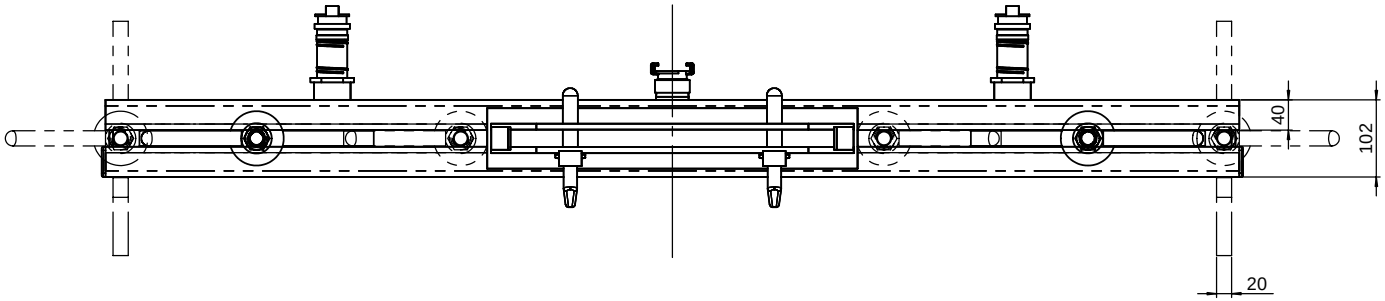

Spreader bar 3000 for SH/VPM
Applicable for 2 SPS suction plates
spreading distance 560 - 1450 mm.
Suction plates are 90° turnable.

· Bei Änderungungen Rücksprache TB !

Gewicht:

Schutzvermerk nach DIN 34 beachten!
Nachdruck nur mit unserer Genehmigung!

	Datum	Name
Erst.	10.8.2005	TB-Praktikant
Gepr.		

Benennung
Traverse 3000 für SH / VPM,
TK 3000 Kp, L=1500 mm,
für 2 SPS mit Mittenabstand 560-1450 mm

WA:

Kunde:

Artikelnummer/Zeichnungsnummer
D52500166

Blatt 1 von 1

Zust. | Urspr. | Ers. f. | Ers. d.

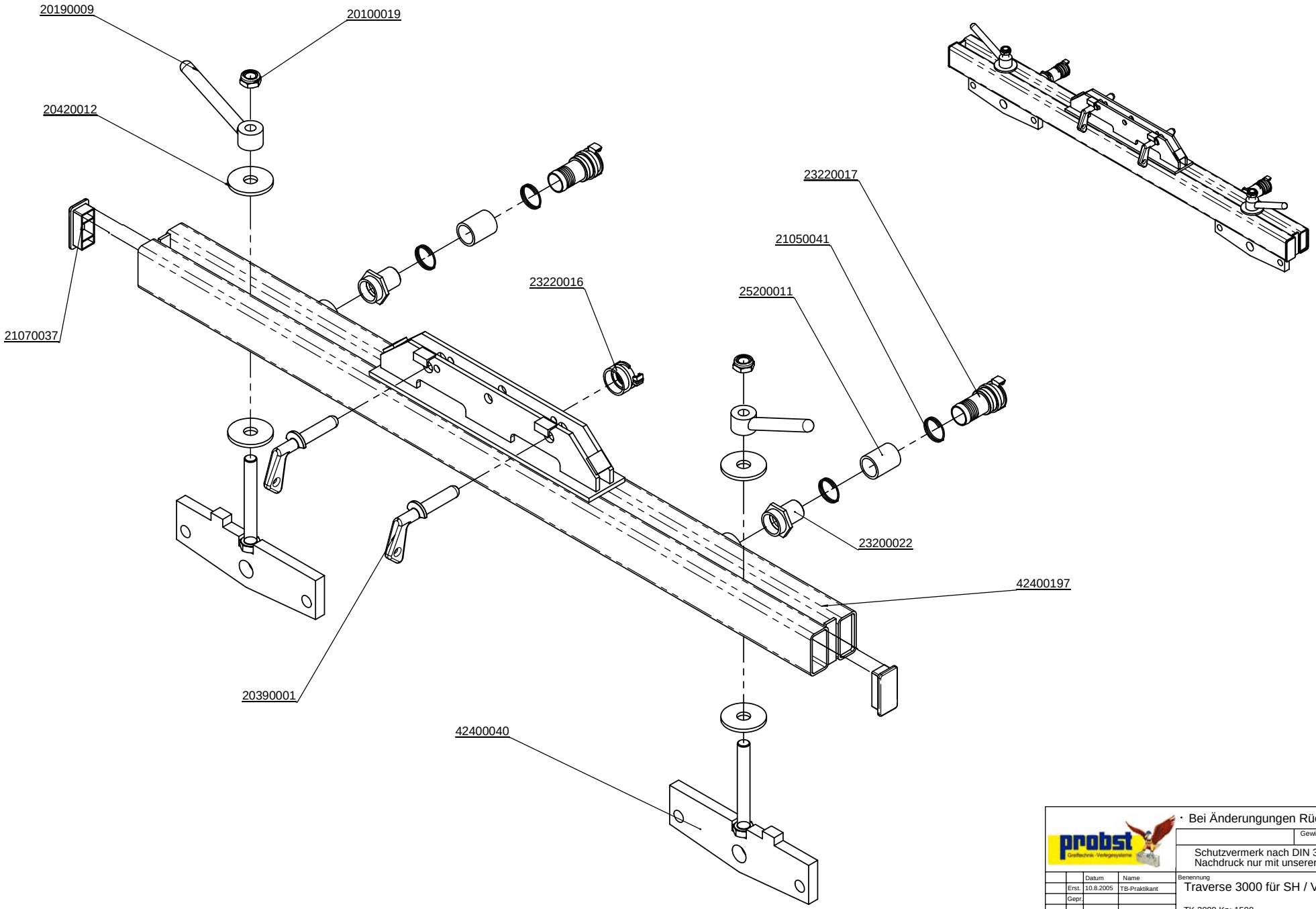

probst Greifschnitt-Verlegesysteme

· Bei Änderungungen Rücksprache TB !

Gewicht: 38,5 kg

	Datum	Name
Erst.	10.8.2005	TB-Praktikant
Gepr.		

Benennung
Traverse 3000 für SH / VPM

TK 3000 Kp; 1500

WA:

Kunde:

Artikelnummer/Zeichnungsnummer
E52500166

Blatt 1 von 1

Zust. | Urspr. V020-301 | Ers. f. | Ers. d.

A52400043 SH-2500-UNI-B

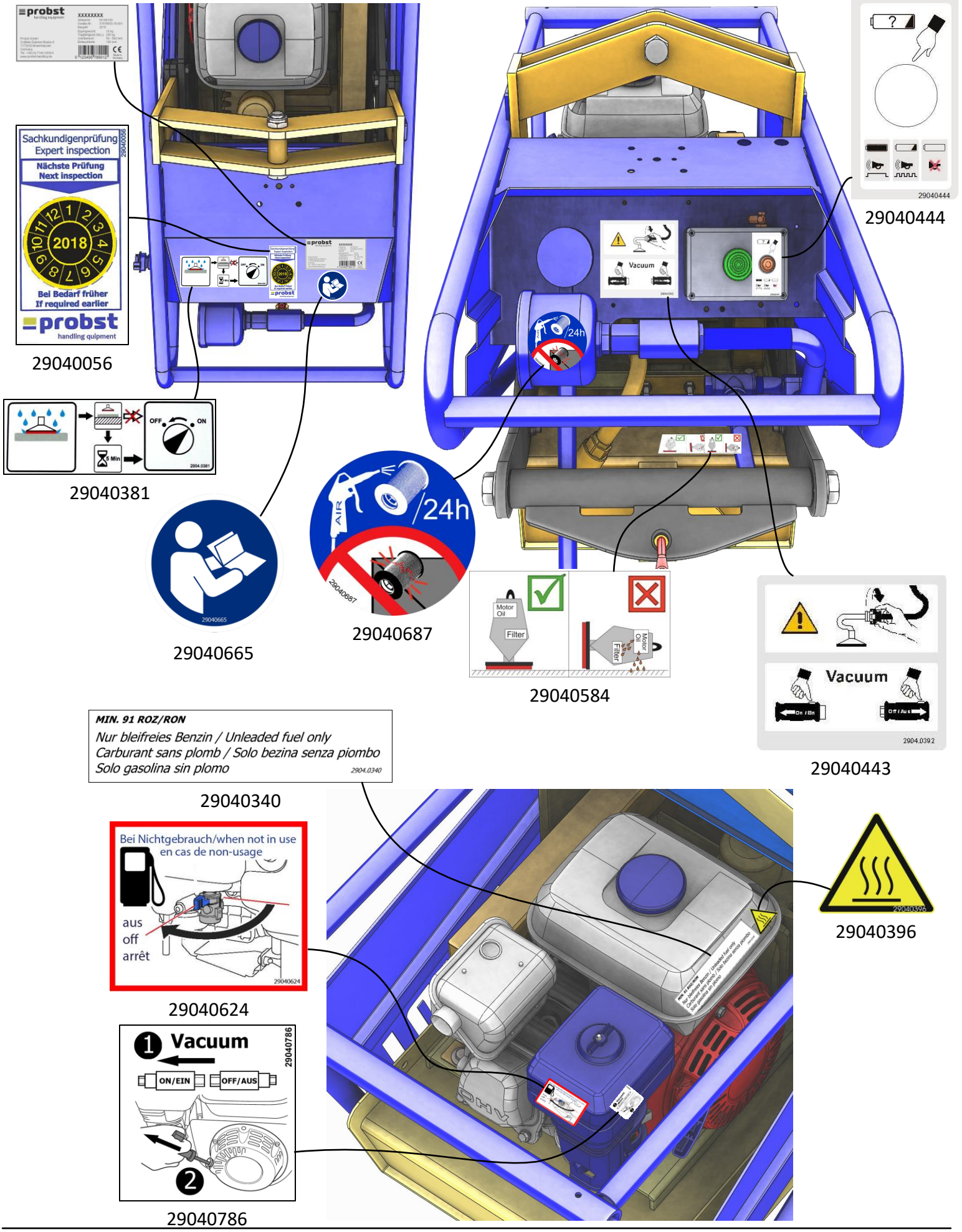

Einige der Abbildungen sind möglicherweise optionales Zubehör des Gerätes/Some of pictures may be optional equipment of the device.

A52400043 SH-2500-UNI-B

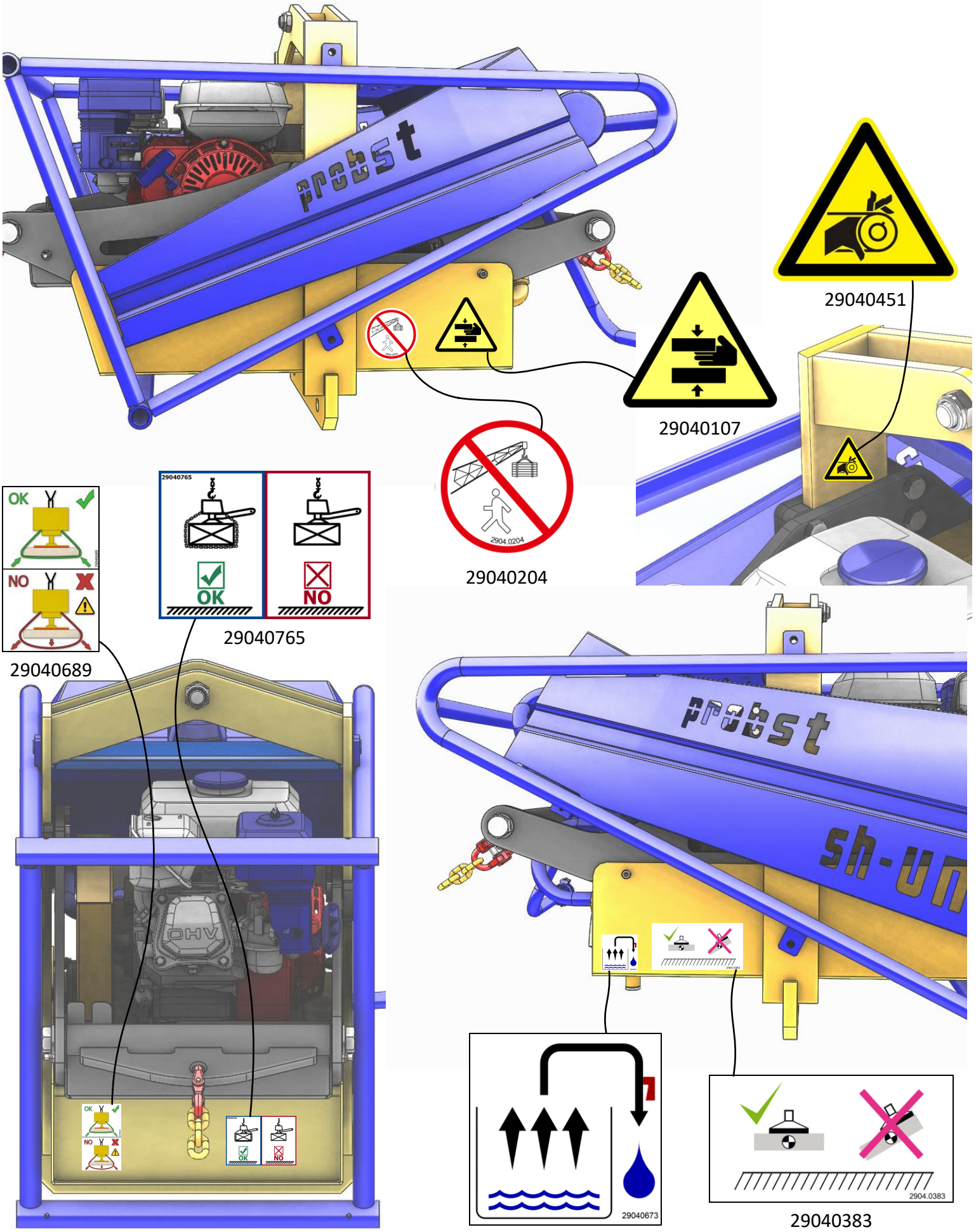

Einige der Abbildungen sind möglicherweise optionales Zubehör des Gerätes/Some of pictures may be optional equipment of the device.

Proof of maintenance

probst handling equipment

Warranty claim for this machine only apply for performance of the mandatory maintenance works (by an authorised specialist workshop)! After each completed performance of a maintenance interval the included form must be fill out, stamped, signed and send back to us immediately [1].

1) via e-mail to service@probst-handling.com / via fax or post

Operator: _____

Device type: _____ **Article -No.:** _____

Device-No.: _____ **Year of make:** ____

First inspection after 25 operating hours

Date:	Maintenance work:	Inspection by company:
		Company stamp
		…… *Name* *Signature*

All 50 operating hours

Date:	Maintenance work:	Inspection by company:
		Company stamp
		…… *Name* *Signature*
		Company stamp
		…… *Name* *Signature*
		Company stamp
		…… *Name* *Signature*

Minimum 1x per year

Date:	Maintenance work:	Inspection by company:
		Company stamp
		…… *Name* *Signature*
		Company stamp
		…… *Name* *Signature*

Probst GmbH
Gottlieb-Daimler-Straße 6
71729 Erdmannhausen, Germany

Telefon +49 7144 3309-0
Fax +49 7144 3309-50

www.probst-handling.com
info@probst-handling.com