# Operating Instructions

Translation of original operating instructions

**Vacuum Lifting Device QUICKJET**

**QJ 600-e 110/60**

Bitte beachten Sie, dass das Produkt ohne vorliegende Betriebsanleitung in Landessprache nicht eingesetzt / in Betrieb gesetzt werden darf. Sollten Sie mit der Lieferung des Produkts keine Betriebsanleitung in Ihrer Landessprache erhalten haben, kontaktieren Sie uns bitte. In Länder der EU / EFTA senden wir Ihnen diese kostenlos nach. Für Länder außerhalb der EU / EFTA erstellen wir Ihnen gerne ein Angebot für eine Betriebsanleitung in Landessprache, falls die Übersetzung nicht durch den Händler/Importeur organisiert werden kann.

Please note that the product may not be used / put into operation without these operating instructions in the national language. If you did not receive operating instructions in your national language with the delivery of the product, please contact us. In countries of the EU / EFTA we will send them to you free of charge. For countries outside the EU / EFTA, we will be pleased to provide you with an offer for an operating manual in the national language if the translation cannot be organised by the dealer/importer.

# 1 Contents

# 2 Declaration of Conformity

**Declaration of conformity**

| | |
|---|---|
| **Description:** | Vacuum Lifting Device QUICKJET |
| **Type:** | QJ 600-e 110/60 |
| **Order-Nr.:** | 5240.0034 |
| **Manufacturer:** | Probst Greiftechnik◆Verlegesysteme GmbH<br>Gottlieb-Daimler-Strasse 6<br>D-71729 Erdmannhausen<br>info@probst.eu www.probst.eu |

Complies with the following provisions applying to it

**EC-machinery directive 2006/42/EG**

Applied harmonized standards in particular

**DIN EN ISO 12100**

Safety of machinery - General principles for design - Risk assessment and risk reduction (ISO 12100:2010)

**DIN EN ISO 13857**

Safety of machinery — Safety distances to prevent hazard zones being reached by upper and lower limbs (ISO 13857:2008)

**DIN EN 349 (ISO 13854)**

Minimum distance to avoid squeezing any parts of the body

**DIN 45625**

Airborne noise measurement; enveloping surface-procedure; compressor including vacuum pump (displacement-, turbo- and jet-compressors)..

**DIN 45635-13**

Measurement of airborne noise emitted by machines (displacement-, turbo- and jet-compressors).

**DIN EN 1012-1 / DIN EN 1012-2**

Compressors and vacuum pumps; Safety requirements part 1 and 2.

**DIN EN 60204-1 (IEC 60204-1)**

Safety of machinery, electrical equipment of industrial machines. Part 1: General requirements

**2006/95/EG** (Low voltage standard)

**2004/108/EG** (Electromagnetic compatibility)

**DIN EN 55014-1 (IEC/CISPR 14-1)**

Electromagnetic compatibility – Requirements for household appliances, electric tools, and similar apparatus. Part 1: Emission.

**DIN EN 55014-2 (IEC/CISPR 14-2)**

Electromagnetic compatibility – Requirements for household appliances, electric tools, and similar apparatus. Part 2: Immunity.

**Authorized person for EC-dokumentation:**

Name: J. Holderied
Address: Probst Greiftechnik◆Verlegesysteme GmbH; Gottlieb-Daimler-Str. 6; D-71729 Erdmannhausen

**Signature, informations to the subscriber:**

Erdmannhausen, 18.09.2012.....
(M. Probst, Managing director)

## EC-Declaration of Conformity / UKCA-Declaration of Conformity

| | |
|---|---|
| Manufacturer: | Probst GmbH<br>Gottlieb-Daimler-Straße 6<br>71729 Erdmannhausen, Germany<br>info@probst-handling.de<br>www.probst-handling.com |
| Importer: | Probst Ltd<br>Unit 2 Fletcher House<br>Stafford Park 17<br>Telford Shropshire TF3 3DG, United Kingdom<br>www.probst-handling.co.uk<br>sales@probst-handling.co.uk |

The machine described above complies with the relevant requirements of the following EU directives:
*The object of the declaration described above is in conformity with the relevant UK-Regulations and UK-Guidelines:*

**EC-machinery directive 2006/42/EC** *(Reference: OJ L 157, 09.06.2006)*

*UK-Regulation: Supply of Machinery (Safety) Regulations 2008 (SI 2008 No. 1597)*

The following standards and technical specifications were used:

**DIN EN ISO 12100**

Safety of machinery - General principles for design - Risk assessment and risk reduction

*UK-Regulation: BS EN ISO 12100-1:2003+A1:2009*

**DIN EN ISO 13857**

Safety of machinery - safety distances to prevent hazard zones being reached by upper and lower limbs.

*UK-Regulation: BS EN ISO 13857:2019*

**2014/30/EU (Electromagnetic compatibility)** / *(Reference: OJ L 96, 29.03.2014)*

*UK-Regulation: Electromagnetic Compatibility Regulations 2016 (SI 2016 No. 1091)*

**DIN EN 60204-1 (IEC 60204-1)**

Safety of machinery, electrical equipment of industrial machines. Part 1: General requirements.

*UK-Regulation: BS EN 60204-1:2018*

**DIN EN 1012-1 / DIN EN 1012-2**

Compressors and vacuum pumps; Safety requirements part 1 and 2.

*UK-Regulation: BS EN 1012-1:2010*

**Authorized person for EC-documentation:**

Name: Jean Holderied
Address: Probst GmbH; Gottlieb-Daimler-Straße 6; 71729 Erdmannhausen, Germany

***Authorized person for UK-documentation:***

*Name: Nigel Hughes*
*Address: Probst Ltd ; Unit 2 Fletcher House; Stafford Park 17; Telford Shropshire TF3 3DG, United Kingdom*

Signature, information to the subscriber:

Erdmannhausen, 02.08.2021.....
(Eric Wilhelm, Managing director)

# 3 Safety

## 3.1 Safety Symbols

| | |
|---|---|
|  | ***Danger to life!***<br>Identifies imminent hazard. If you do not avoid the hazard, death or severe injury will result. |
|  | ***Hazardous situation!***<br>Identifies a potentially hazardous situation. If you do not avoid the situation, injury or damage to property can result. |
|  | ***Prohibition!***<br>Identifies imminent a prohibition. If you do not avoid the prohibition, death and severe injury, or damage to property will result. |

## 3.2 Safety Marking

**WARNING SIGN**

| Symbol | Meaning | Order-No.: | Size: |
|---|---|---|---|
|  | It is not allowed to be under hanging loads. **Danger to life!** | 2904.0101 | 102 mm |
| 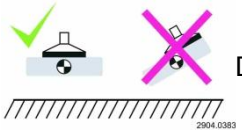 | Do not lift any components off-centre. | 2904.0383 | 60x90 mm |
| 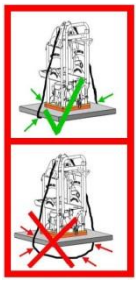 | Fasten the security chain tight and form-closed at the other side of the device.<br>The security chain may never hang loose under the load (stone slab). | 2904.0406 | 42x92 mm |

## WARNING SIGN

| Symbol | Meaning | Order-No.: | Size:: |
|---|---|---|---|
|  | Danger of squeezing the hands. | 2904.0221<br>2904.0220<br>2904.0107 | 30 mm<br>50 mm<br>80 mm |

## REGULATORY SIGN

| Symbol | Meaning | Order-No.: | Size:: |
|---|---|---|---|
|  | Read operating instructions before operating. | 2904.0366<br>2904.0365 | 30x57 mm<br>50x95 mm |

### 3.2.1 Function Control

- Before using the device check the functions and the working condition.
- Maintenance and lubrication are only permitted when device is shut down!

- Do not use the device, until all faults which can cause safety hazards are removed.
- If there are any cracks, splits or damaged parts on any parts of the device, **immediately** stop using it.

- The operating instructions must be available at the workplace every time.
- Do not remove the data-plates of the machine.
- Unrecognisable information signs must be replaced.

### 3.1 Safety at work

- The use of the vacuum lifting device is only permitted in proximity to the ground. Do not swing it over peoples heads.
- The manual guiding of is only allowed for devices with handles.
- The operator is not allowed to leave the control unit as long as the vacuum lifting device loaded with load (stone slab). The load must always be in the range of vision of the operator.

- Always keep an eye on the vacuum gauge. Never lift loads when the vacuum is below the required under pressure (mbar). If the pointer of the pressure gauge moves into the red danger zone, **lower the load immediately! Danger! Load could fall down!**

- While using the vacuum lifting device is the stay of persons in the working area forbidden. Except it is indispensable. Caused of the way of using the vacuum lifting device , e.g. if the device must be leaded by hand.

- While using the vacuum lifting device be sure that there are no persons in the working area. **Danger to Life!!**
- The device must never be subjected to a force acting in a lateral direction due to diagonal pulling.
- Do not lift any components off-centre, because that could fall down. **Danger of tilting!**
- Release the load only when it is completely safely resting on the surface. **Keep fingers away from**

**the load when you release it as they can be crushed!**

- The capacity and the nominal width the vacuum lifting device are not allowed to cross over.
- Do not use the vacuum lifting device to jerk seized set down load.
- Avoid quick or jerky movements with the vacuum lifting device. E.g. caused through driving fast over uneven grounds/site is **forbidden**. ***Because the gripping good could fall down.***

## 3.2 Instructions for the Company

The lifting devices are manufactured according to current technical standards and are safe. However, they will present hazards

- if they are not operated by qualified or, at the least, trained staff,
- if they are used contrary to the approved applications.

Problems can arise

- for the health and life of operators and other persons,
- for the lifting device and other valuable goods.

## 3.3 Instructions for Installation, Maintenance and Operating Personnel

The device must be installed and maintained by qualified personnel, mechanics and electricians.

Each person in your company involved in the installation, start-up, operation, maintenance, and repair of the device must have read and understood the operating instructions and especially the chapter "Safety" therein.

Your company must ensure by internal measures

- that the operators of the lifting device are properly trained,
- that they have read and understood the operating instructions,
- that the operating instructions will be available to them at any time.

The responsibilities for the tasks carried out with the device must be clearly organized and observed. There must be no ambiguity regarding responsibilities.

## 3.4 Requirements for the Installation Location

- The lifting vacuum lifting device may not be used in explosion-risk rooms or areas.
- The ambient temperature may not exceed and 40 °C (if this temperature is exceeded, please consult the manufacturer before using the device).
- The vacuum lifting device must be connected to the electrical supply and the main switch of the crane from which it is suspended.
  Ensure, by means of internal instructions and regular inspections, that the area around the workplace is kept clean and tidy at all times.

## 3.5 Special Hazards

- The operating range has to be covered for unauthorized persons, especially children.
- The workplace has to be sufficiently illuminated.
- Take care when handling wet, dirty and not solidified components.
- **The working with the vacuum lifting device in case of atmospheric editions under 37,5° F is forbidden! Because the goods could be fall down caused by dampness or freezing.**
- Take care in case of thunderstorm!
- Since the load is held on the suction plates of the unit by a vacuum, it will fall off as soon as this vacuum is lost (e.g. energy failure).
- This can happen if the vacuum generator fails. An integrated vacuum reservoir maintains the vacuum for a short safety period whose duration depends on the porosity of the work piece surface.
- If the vacuum generator fails, lower the load immediately if this is possible. Otherwise, leave the danger area below the load immediately.
- The unit draws in large amounts of air and hair and items of clothing can be drawn into the air inlet. **Do not** look into the air inlet when the unit is running: it is even possible for your **eyes to be drawn into the air inlet.**

### 3.5.1 Hydraulic excavator and other lifting equipments

- Hydraulic excavator and other lifting equipments have to be in good, safe working condition.
- Only authorized, certificated and qualified personnel is allowed to operate the excavator and other lifting equipments.
- The operator staff must have all the necessary qualifications.
- **Take care that the maximum capacity of the hydraulic excavator and other lifting equipments is not exceeded.**

## 3.6 Workplaces

- The workplace of the operator is in front of the operator handle.
- The operator must stand so that he can see the vacuum gauge at all times.

## 3.7 Testing the Safety Devices

The lifting device is equipped with following safety equipment:

- pressure gauge (with red danger zone display)
- alarm signal (audio)

Check this equipment

- at the beginning of each shift (when operating in shifts),
- once a week (when operating continually).
- Correct faults before operating the device. If faults occur during operation, switch the device off and correct the faults before continuing work with the device.

### 3.7.1 Inspecting the vacuum hoses and hose clamps

- Check that all vacuum hoses and hose clamps are securely seated. Tighten any loose connections.

### 3.7.2 Testing the vacuum reservoir

- See the sub-section "Leak test" in the section ”Maintenance”
- Rectify any detected faults before using the lifting device. If a fault becomes apparent during, switch off the lifting device and rectify the fault.

## 3.8 Damages of suction plate

**Avoidance of damages:**

To avoid damages of the rubber seal on the suction plate (chinks, abrasion) take notice, that:

during the operation (lifting, transporting and lowering) with the device, the suction plate does not brush or pump against other products or materials.

Otherwise the rubber seal on the suction plate could be damaged (danger of pressure loss).

Product could fall down. **Danger of accidents!**

## 3.9 Protective equipment

The protective equipment must consist, according to the safety regulations of the following parts:

- Protective clothing
- Safety gloves
- Safety shoes
- Hearing protector

## 3.10 Behaviour in Emergencies

An emergency situation exists when

- power suddenly fails (device switches off),
- the vacuum pressure drops below -0.22 bar to the red section on the scale of the vacuum gauge.

Lower the load immediately if possible. If this is not possible, immediately leave the dangerous area near the load, since it will be dropped from the device.

## 3.11 Checking the Safety Devices

The lifting device is equipped with following safety devices:

- vacuum gauge with red danger zone
- warning device, audible (optional)

Check these devices at the beginning of each shift (when operating in shifts) or once a week (when operating continually).

**Checking the Vacuum Gauge and the Warning Device**

**Warning device monitors the operating vacuum and power failure**

⇨ Switch on the lifting device.

⇨ Place the lifting device on a stone slab or similar material and apply vacuum.

**Caution**: Simply apply vacuum to attach the suction pads to the stone slab. Do not lift the stone slab, since it may be dropped during the test!

⇨ When the vacuum has built up, lift the edge of a suction pad to create a leak.

⇨ **The reading on the vacuum gauge decreases. When the vacuum drops below red danger zone, the warning device must sound.**

**Checking the Vacuum Hoses and Hose Clamps:**

Check all vacuum hoses and clamps for proper mounting and tighten the clamps if necessary.

**Checking the Vacuum Reservoir**

See "Testing for Leaks"" in chapter "Maintenance"

**Correct any faults before using the device. If faults occur during operation, switch the device off and correct the faults before continuing work with the device.**

# 4 General

## 4.1 Authorized use

The device ***QUICKJET*** „**QJ 600 e**" is exclusively applicable for lifting, transporting and laying of stone slabs, concrete elements and also highly porous slabs and products with exposed aggregates and other rough surfaces , with the corresponding suction plates.

This device can be hung from any carrier/support frame (e.g. excavator) by means of load hook, chains, cables and such like.

Various suction plates can be fitted to the device (**QJ 600 e**) via a quick release locating pin, enabling it to be used for many different purposes and with many different loads.

**The permissible carrying capacity of the device (QJ 600 e) of 600 kg must not be exceeded!**

---

This device is equipped with the following safety devices:

- With a fixed suction plate ESP 120-38/38 (carrying capacity max. 120 kg),
- Electric power cable with on-off switch at the plug connector for external electricity supply (110 V alternating current),
- security chain.

---

**Accessories**:

Gas-operated *power generator EU 20 i* as an alternative power supply to operate the device „**QJ 600 e**".
→ Order-Nr.: **52500240** (230V/1600 (2000) VA; 4,1 l tank; 98 ccm; weight 21,5 kg)

- Suction plate ESP 170-90/25 (Carrying capacity max. 170kg **#**) → Order-Nr.: **42420031**
- Suction plate ESP 250-90/35 (Carrying capacity max. 250kg **#**) → Order-Nr.: **42420029**
- Suction plate ESP 320-59/59 (Carrying capacity max. 320kg **#**) → Order-Nr.: **42420009**
- Suction plate ESP 350-151/29 (Carrying capacity max. 350kg **#**) → Order-Nr.: **42420022**
- Suction plate ESP 400-98/48 (Carrying capacity max. 400kg **#**) → Order-Nr.: **42420018**
- Suction plate ESP 500-140/40 (Carrying capacity max. 500kg **#**) → Order-Nr.: **42420024**
- Suction plate ESP 600-78,5/78,5 (Carrying capacity max. 600kg **#**) → Order-Nr.: **42420010**

  # value at -0,22 bar low pressure

To ensure proper function of the electric turbine when powering the QJ 600 e with a generator, **be aware** of the following facts:

- The minimum continuous power production has to be **1.600 W**.
- Exclusively power generators with modern inverter technology, such as a. ***Honda EU 20 I*** model, should be used.

**UNAUTHORIZED TRANSPORTIONS:**

All **unauthorized alterations** of the device and the use of any self-made additional equipment could cause danger and are therefore **forbidden**!!

**Never exceed** the **carrying capacity** and the **nominal width/nominal size** of the device.

**All unauthorized transportations with the device <u>are not allowed</u>!**

- Transportation of people and animals.
- Transportation of other loads and material than described in this manual.
- Using accessories of the „generator EU 20i" for operating other electrical appliances (such as radios, drills, etc.)

- The device is only designed for the use specified in this documentation.
- Every other use is not authorized and is forbidden!
- All relevant safety regulations, corresponding legal regulations, especially regulations of the declaration of conformity, and additional local health and safety regulations have to be observed.

Prior to every operation the user must ensure that:

- the equipment is suited to the intended operation, the functioning and the working condition of the equipment is examined, and the loads are suitable to be handled.

*Any doubts about instructions should be raised with the manufacturer prior to use.*

**<u>ATTENTION:</u> The use of this device is only permitted in proximity to the ground.**

**Only suction plates** of the manufacturer **PROBST** shall be used!!!

- Some suction plates which can be mounted to the device will reduce its carrying capacity.
  *The maximum load is indicated on each suction plate.*
- Use only suction plates which are ***approved*** for this device!
- ***Do not exceed*** the maximum carrying capacity of the suction plates!!!
  **Danger: Load** (stone slabs) **will fall down!**

- The load (stone slabs) which is to be sucked and transported, must have sufficient inherent stability, otherwise there is **risk of breakage** when lifting!
- Stone slabs **must not** be bend when lifting - especially take care with thin and large-sized stone slabs!
- Generally, the load (stones slab) is only to be sucked in the **middle**, otherwise the load hangs diagonally under the device and the load could break - especially when lifting large stone slabs with a small suction plate.
- Standard suction plates are not suitable for the transport of glass plates!

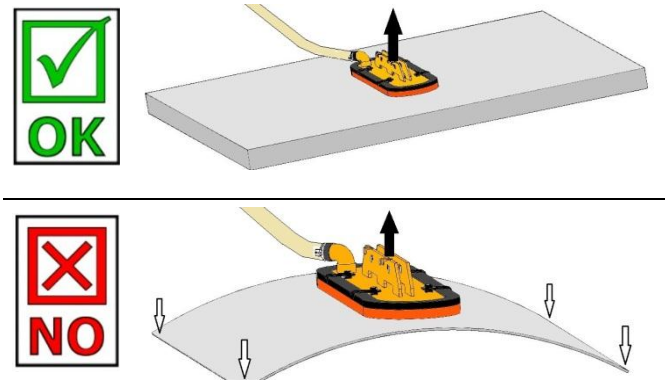

## 4.2 Survey and construction

**Fig.1**

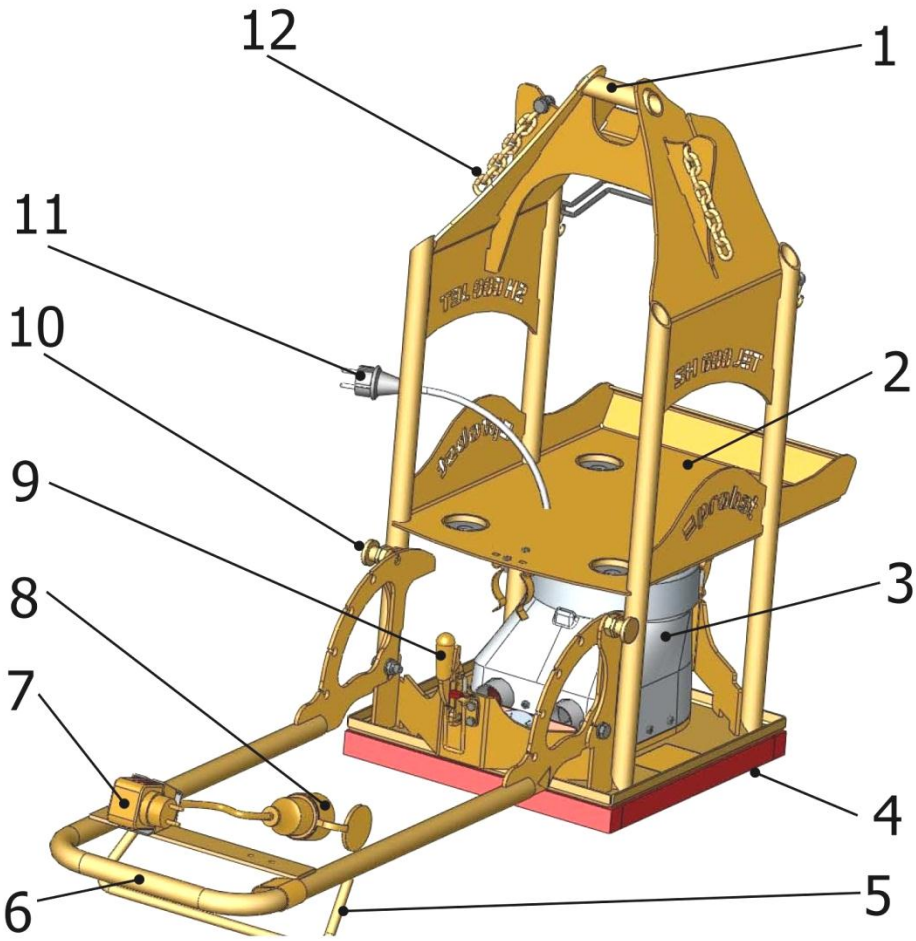


| | |
|---|---|
| 1 | Suspension lug |
| 2 | Assembly position for accessories „power generator EU 20 i“ |
| 3 | Blower unit |
| 4 | Suction plate ESP 120-38/38 |
| 5 | Terminal clamp |
| 6 | Handgrip |
| 7 | Plug for external power supply (203 V) |
| 8 | Socket for blower unit (3) |
| 9 | Locking spanner for mounting the accessories Suction plates |
| 10 | Spring bolt for adjust the position of the handgrip |
| 11 | Power plug of the blower unit |
| 12 | Security chain |

**QJ 600 e** iincluded accessories (power generator EU 20 i - 52500240)

**Fig.2**

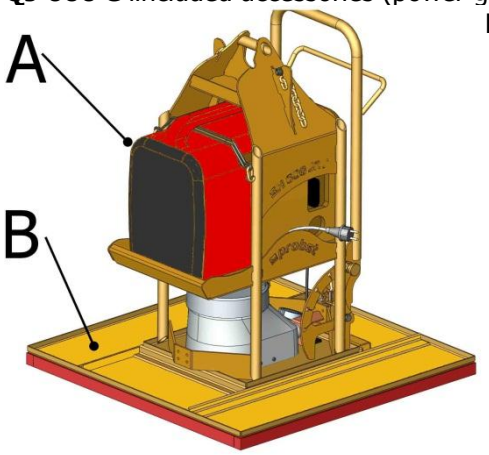


| | |
|---|---|
| A | Power generator EU 20 i – (52500240) |
| B | Accessories suction plate ESP 600 |

## 4.3 Technical Data

| Type: | Type of driving | Carrying Capacity | Dead weight |
|---|---|---|---|
| QJ 600 e | electrical, 110 V/60 Hz | 600 kg # | ~ 41 kg |

\# dependent on the corresponding allowable suction plate

# 5 Installation

## 5.1 Mechanical connection

### 5.1.1 Suspension lug

- The device is equipped with a suspension lug and can be mounted on various support frames/lifting devices.
- Take careful that the suspension lug is safety joined with the crane hook and can not slip down.
- **The maximum carrying capacity of the support frame/lifting device is not allowed to cross over by the dead weight of the device and the maximum load.**

### 5.1.2 Load hook and chains

- Fit suspension ring in the load hook of the lifting equipment.
- **Ensure that the single chains are not twisted and may be easily pulled through the jaws**
- Attaching the device to the lifting equipment take care that all local safety regulation is observed.
- **It is not allowed to exceed the carrying capacity of the lifting equipment with the device and the maximum load.**

## 5.2 Installation HONDA generator EU 20 i

When installing the Honda generator to the designated place on the device "QJ 600 e", the vacuum blower must be switched off. The device must be stand completely on the floor (on even ground).

1. Remove the power cable from power cable holder (1) and pull off the cable socket (2) from the cable plug (3).


2. Remove power cable ((3) coming from blower unit) from the holder at the handgrip.

3. Then attached the electric socket at the terminal clamp (in front of the blower unit).

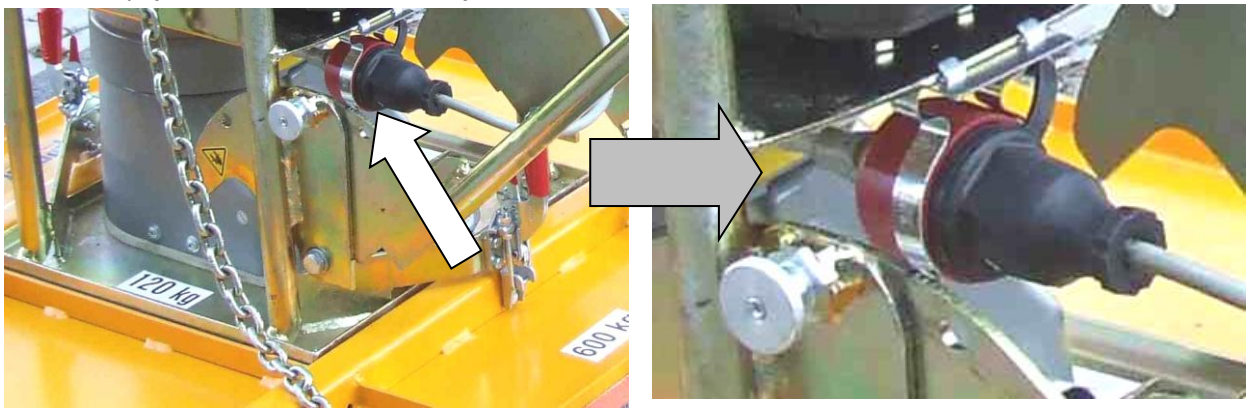


4. Pull both spring bolts a little out (right and left of the device) then turn and release it.

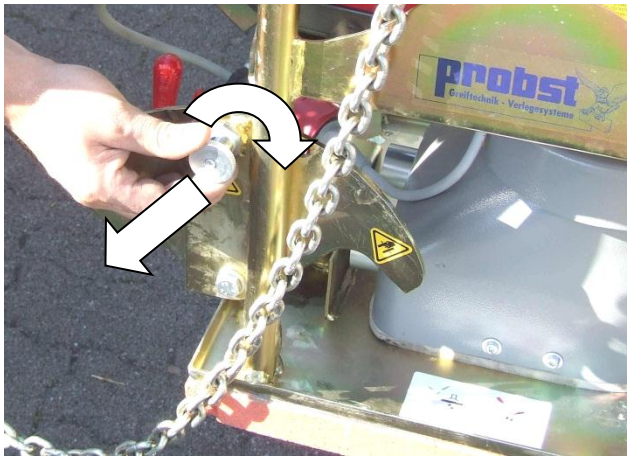


5. Move the handgrip downwards (↘), so that the HONDA generator can be installed on the device.

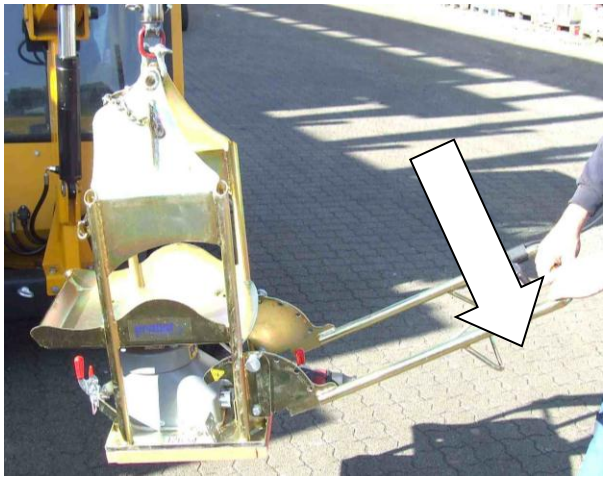

6. To lock the handgrip, pull the both spring bolts (right and left of the unit) a little out, turning and releasing it until they lock in position.

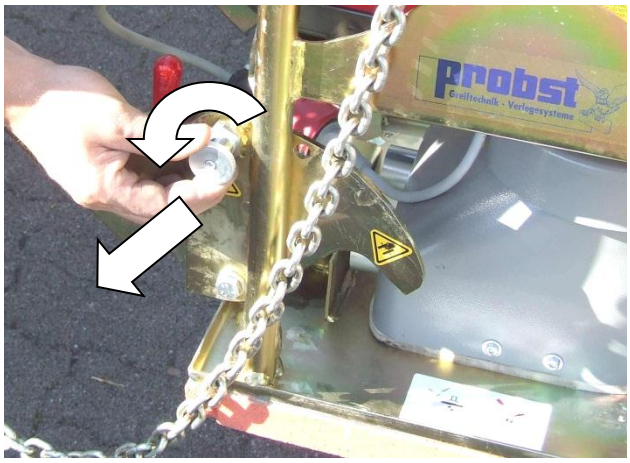


7. Position the HONDA generator at the mounting place (↖).

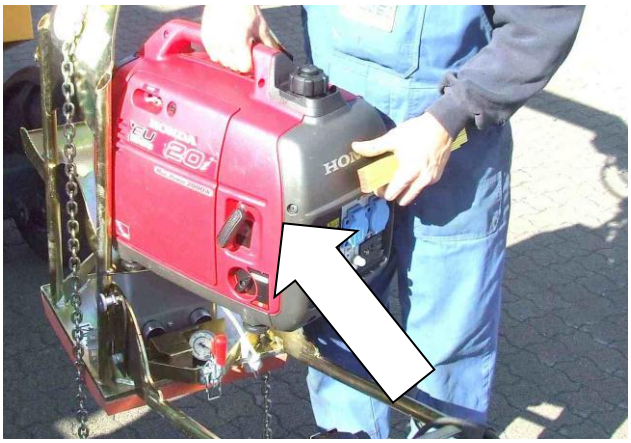

8. This is the correct position of the HONDA-generator at the device (QJ 600 e)


9. Pull the rubber band under the transport handle (at the generator) to secure the generator. Then hook in the rubber band on both designed hooks at the device construction (➔)

- Correct security of the HONDA generator with the rubber band (↘ ↙).

10. Plug in the bridging connector in one of the two electric socket at the HONDA generator (↙).

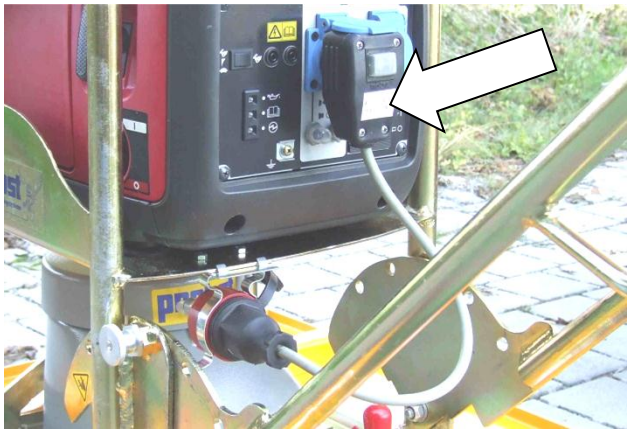

## 5.3 Installation suction plate

When installing/exchanging of other allowed suction plates (for the device „QJ 600 e")the vacuum blower must be switched off. The device must be stand completely on the floor (on even ground).

Only when mounting a new (accessory) suction plate the device „QJ 600 e" may be raised a little (approx. 20 – 30 cm )

11. Device with integrated standard suction plate ESP 120-38/38

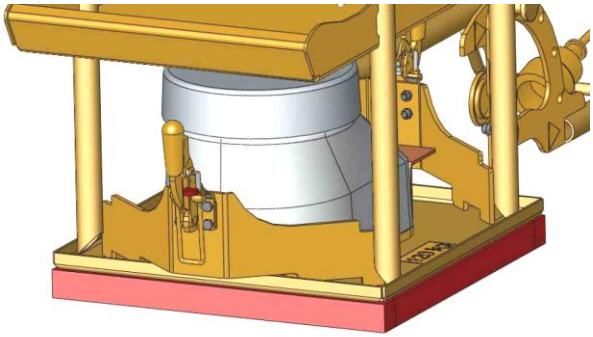

12. Device with installed standard (accessory) suction plate.

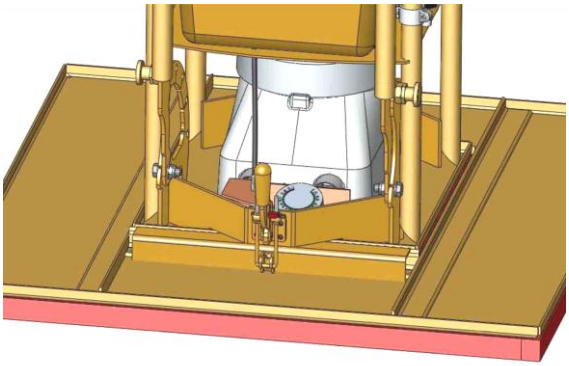

Position the device „QJ 600 e" in the middle of the respective accessory suction plate and secure the device „QJ 600 e" with the two locking spanner.

13. Locking spanner in closed position.

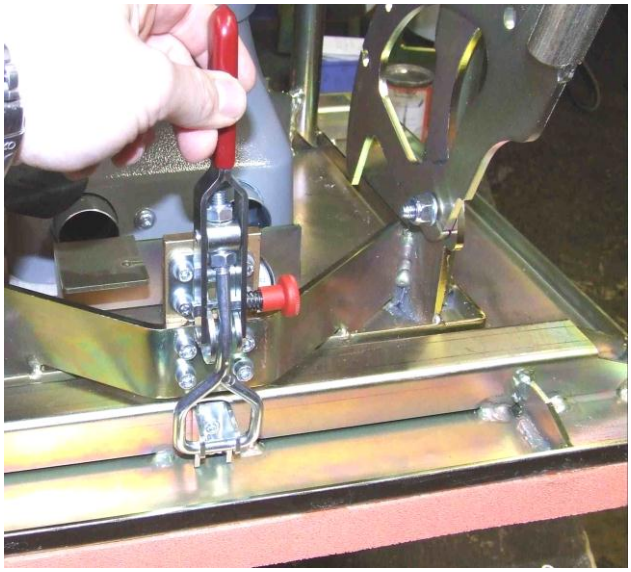

- To open the locking spanner, first press the release button (🡐) and then open clamping lever (🡼). (When closing the locking spanner the release button locks automatically.)

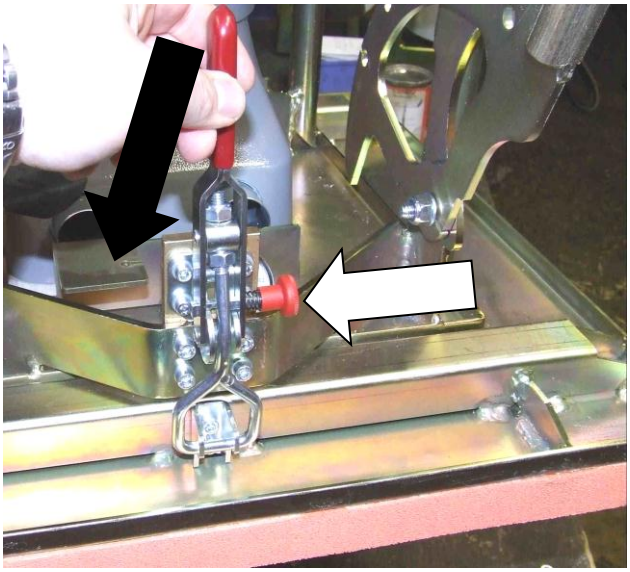

# 6 Operation

## 6.1 Operation general

The main power supply **must** be fixed at the hand grip with the provided power cable holder (1). Against accidental release (e.g. by accidentally stepping on the cable with the following: **Last falls down**) (see 15.)

If you set down the unit with the motor running, take care not to place it on an airtight surface, since this will block the flow of **cooling air**. Instead, place the unit on a support (such as a block of wood).

Always switch off the unit if you do not intend to use it again within **two minute**s.

14. Position the power cable (3), coming from the *blower unit* at the hand grip (↘).

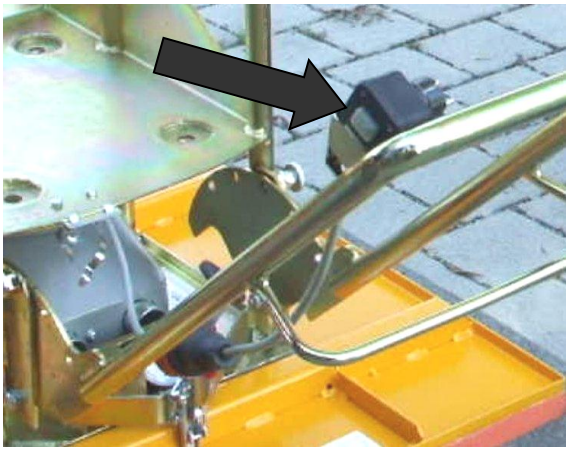

15. Remove the mains power cable from power cable holder (1) and also the cable socket (2) from the cable connector (3).


16. To adjust the hand grip (↙) to the desired working height,

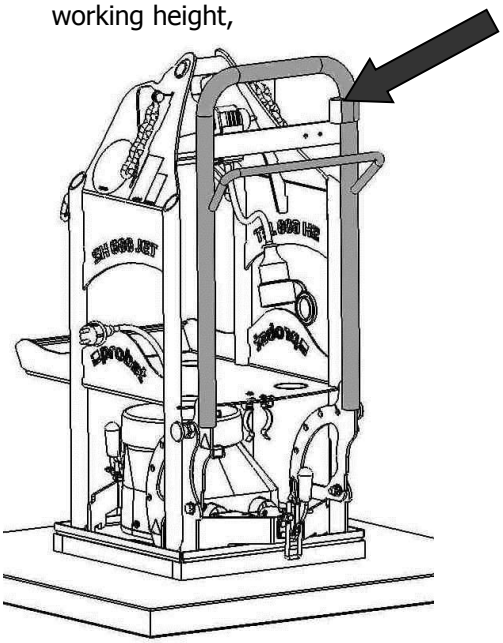

17. pull both spring bolts a little out (right and left of the device) then turn and release it.

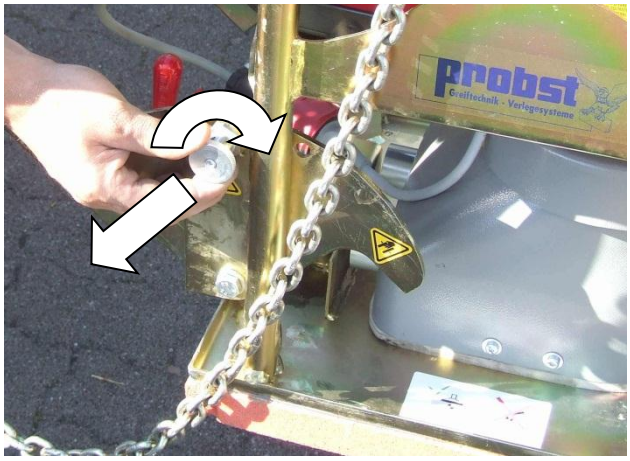

18. Move the handgrip downwards (↘),to achieve the desired working height.

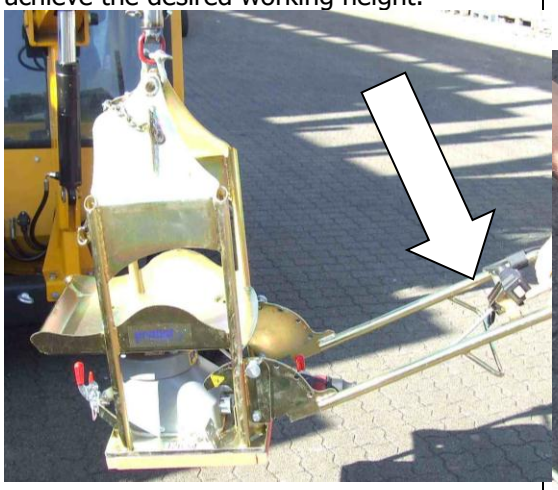

19. To lock the handgrip, pull the both spring bolts (right and left of the unit) a little out, turning and releasing it until they lock in position

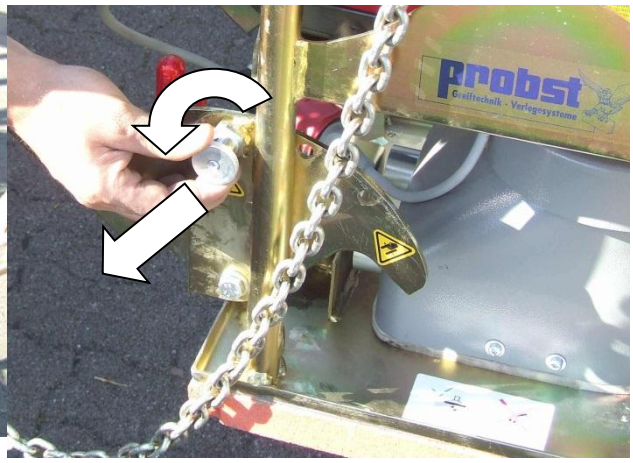


20. Switch on the vacuum generation at the pressure switch (at the blower unit) (↖).

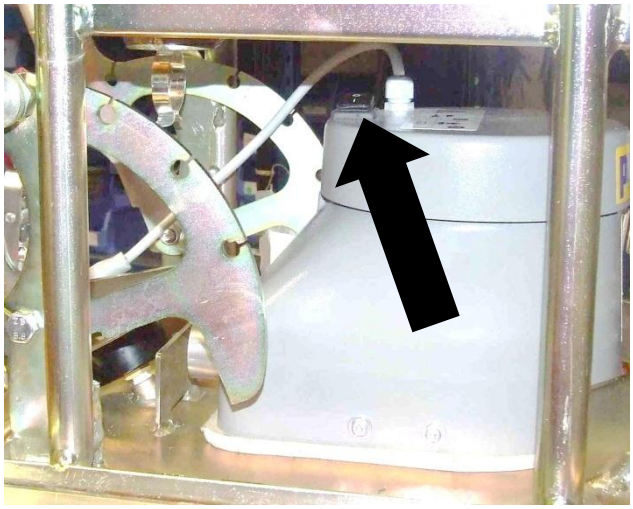

21. Press the ON/-OFF-switch (↖) at the cable socket to suck or release a load (stone slab).

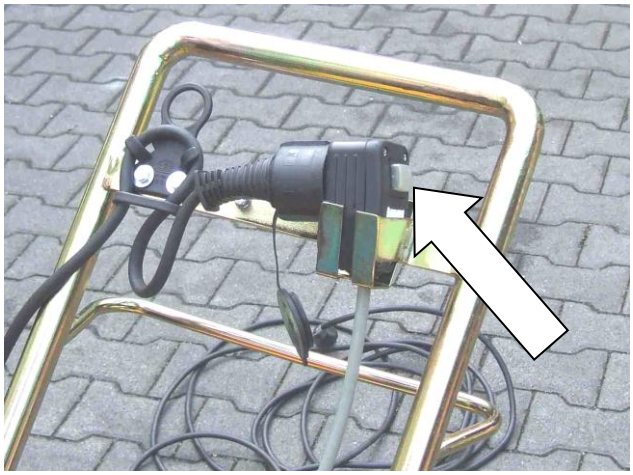

22. Place the suction plate **always** completely on the load (stone slab). Position the suction plate always centrally on the load (stone slab) for a uniform load balancing.

    When the suction plate is positioned off center, there is a risk (when lifting and lowering), that the load suddenly may fall down. Caused by uneven load balancing.

    Watch the pressure gauge. Once a under pressure of - 0.22 bar is reached, the load can be lifted.

    **Never lift the load before lifting - the load would fall down**

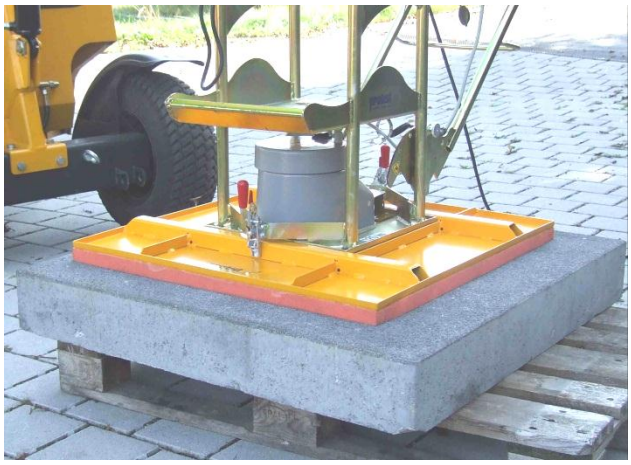

23. Lift the device with the sucked load just a little (ca. 20 cm), then remove the safety chain from the chain case (↖) and …

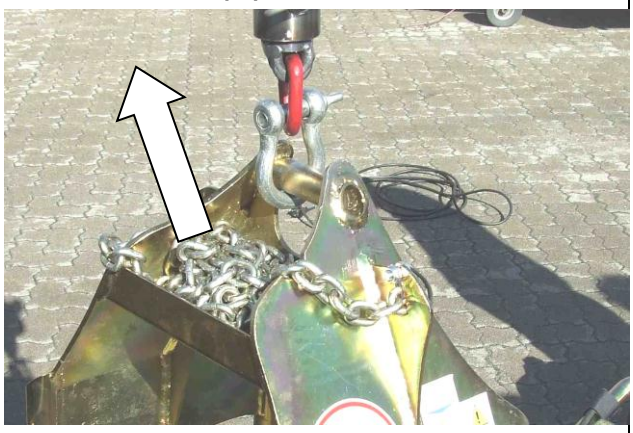

24. … throw it under the lifted load.
**Never grip with the hands under the load (stone slab) – danger of squeezing the hands!**

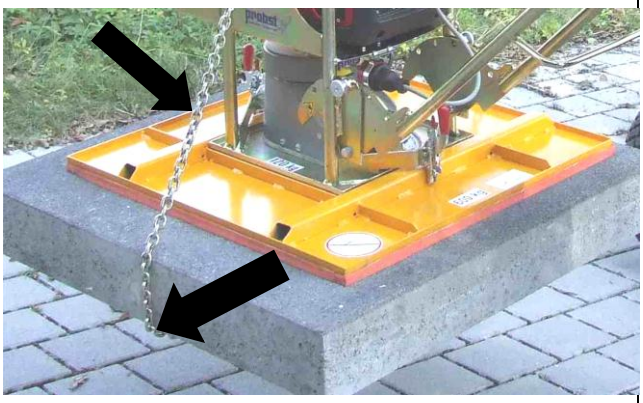

25. Suspend and tighten the security chain on the other side of the device (↙) (place the end of the chain into the chain case).

26. The safety chain must fit tightly to the load, so that load with vacuum failure (e.g. due to power failure) is held by the security chain.

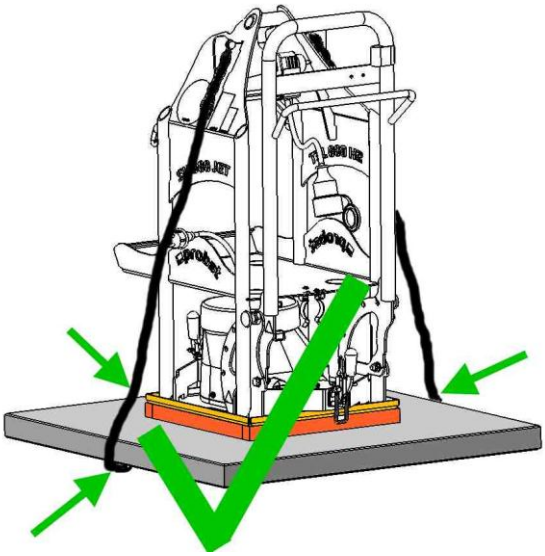

27. **The safety chain must <u>never</u> hang loose under the load, otherwise load may fall down, in a vacuum load failure (e.g. due to power failure).**

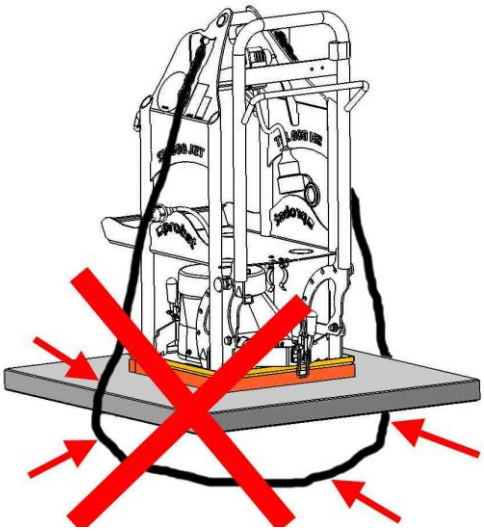

28. Now the device with sucked load be transported to the destination.
29. Lower the load carefully (distance to the ground approx. 20 cm), then remove safety chain and throw it under the load.
30. Never grip with the hands under load (stone slab)! Danger of squeezing!
31. Safety chain should be returned to chain case.
32. Put the device with the sucked load completely down on the floor.

**The safety chain must never be used as a "lifting tackle" to attach the device (QuickJet) on the support frame (e.g. excavators)!**

The duty cycle (lifting/venting) should not exceed **2/3 to 1/3**.
**Maximum lifting period 30 seconds**, followed by 15 seconds with inlet free (without load).

## 6.2 Operation with HONDA power generator EU 20 i

**Details see chapter „Installation HONDA- power generator EU 20 i", or attached HONDA-operating instructions (GENERATOR EU 20i).**

# 7 Maintenance and care

## 7.1 General Hints

The device may be installed and maintained only by qualified personnel such as mechanics and electricians.
Always disconnect the electric power before starting any maintenance work.
**The fans must not be opened during the guarantee period as this will entail loss of guarantee cover.**
After any repair or maintenance work, check the safety devices as described in the section "Safety".

To ensure the correct function, safety and service life of the device the following points must be executed in the maintenance interval.
Used **only original spare parts**, otherwise the warranty expires.

**All operations may only be made in unpressurised, electro less and closed state of the device!**

## 7.2 Maintenance Plan

| | Interval | | | | |
|---|---|---|---|---|---|
| | Daily | Weekly | Monthly | Every 6 months | Every 12 months |
| Inspect the safety devices:<br>- Vacuum gauge OK? | X | | | | X |
| Electrical equipment OK? Cable glands tight? | | | | | X |
| All connections (hose clamps, etc.) tight? | | | | X | |
| Instruction plate, rating plate and load plate still mounted on the device? | | | | | X |
| Operating instructions available?<br>Operating personnel familiar with operating instructions? | | | | | X |
| Inspect load-carrying part (such as suspension) for deformation, wear and other damage. | | | | | x |
| Clean and inspect suction pads. Must be free of cracks, lip must be smooth, etc. Replace if necessary. | | X | | | X |
| Clean the air filter | | X | | | |
| Is the inspection sticker up to date? | | | | | X |
| General condition of the device. | | | | | X |
| Leak test | | | X | | X |

### 7.3 Suction plates / seals

Remove any foreign bodies and contamination such as adhesives, glue, sawdust, dust, etc. sticking to the seals at least once a week. Use glycerine to clean the seals.

Immediately replace damaged seals (tears, holes, waves).

Do not use petrol (gasoline).

Use cleaning agent to clean the device (do not use petrol (gasoline) or aggressive or corrosive fluids to clean the device. The hoses will otherwise become leaky or be destroyed).

Suction plates must always be replaced completely. The bolts of the suction plate can be loosened more easily by heating.

### 7.4 Leak Test

Check the device for leaks at least every three months.

- Apply the suction pad to a flat air-tight surface.
- Switch the vacuum blower on and wait until a vacuum of at least -200 mbar is reached.

If this vacuum level is not reached, check:

- whether the seals or hoses are damaged,
- that the connectors are tight,
- that the filter element is clean.

## 7.5 Repairs

- Only persons with the appropriate knowledge and ability are allowed to repair the device.
- Before the device is used again, it has to be checked by an expert.

## 7.6 Safety procedures

- It is the contructors responsibility to ensure that the device is checked by an expert in periods of max. 1 year and all recognized errors are removed (→ see BGR 500).
- The corresponding legal regulations and the regulations of the declaration of conformity have to be observed!
- We recommend, that after checking the device the badge „Safety checked" is put on the device. (Order-No.: 2904.0056+inspection sticker with date).
- You can receive these badges from us.

**The check by an expert must be proved!**

| Device | Year | Date | Expert | Company |
|---|---|---|---|---|
| | | | | |
| | | | | |
| | | | | |
| | | | | |
| | | | | |
| | | | | |
| | | | | |
| | | | | |

### 7.7 Hints to the identification plate

Type, serial-number and production year are very important for the identification of your device. If you need information to spare-parts, warranty or other specific details please refer to this information.

The maximum carrying capacity is the maximum load which can be handled with the device. Do not exceed this carrying capacity.

If you use the device in combination with other lifting equipment (Crane, chain hoist, forklift truck, excavator) consider the deadweight of the device.

**Example:**


### 7.8 Hints to the renting/leasing of PROBST devices

With every renting/leasing of PROBST devices the original operating instructions must be included unconditionally (in deviation of the users country's language, the respective translations of the original operating instructions must be delivered additionally)!

# *Proof of maintenance*

probst handling equipment

***Warranty claim for this machine only apply for performance of the mandatory maintenance works (by an authorised specialist workshop)! After each completed performance of a maintenance interval the included form must be fill out, stamped, signed and send back to us immediately [1].***

1) via e-mail to service@probst-handling.com / via fax or post

**Operator:** _ _ _ _ _ _ _ _ _ _ _ _ _ _ _ _ _

**Device type:** _ _ _ _ _ _ _ _ _ _ _ _ _ _ _ _ **Article -No.:** _ _ _ _ _ _ _ _ _ _ _ _ _ _ _

**Device-No.:** _ _ _ _ _ _ _ _ _ _ _ _ **Year of make:** _ _ _ _

## First inspection after 25 operating hours

| Date: | Maintenance work: | Inspection by company: |
|---|---|---|
| | | |
| | | |
| | | *Company stamp* |
| | | |
| | | …… *Name* *Signature* |

## All 50 operating hours

| Date: | Maintenance work: | Inspection by company: |
|---|---|---|
| | | |
| | | |
| | | *Company stamp* |
| | | |
| | | …… *Name* *Signature* |
| | | |
| | | |
| | | *Company stamp* |
| | | |
| | | …… *Name* *Signature* |
| | | |
| | | |
| | | *Company stamp* |
| | | |
| | | …… *Name* *Signature* |

## Minimum 1x per year

| Date: | Maintenance work: | Inspection by company: |
|---|---|---|
| | | |
| | | |
| | | *Company stamp* |
| | | |
| | | …… *Name* *Signature* |
| | | |
| | | |
| | | *Company stamp* |
| | | |
| | | …… *Name* *Signature* |

Stuttgart HRB 310 453
Geschäftsführer: Martin Probst
USt. IdNr. DE 146197555

Telefon +49 7144 3309-0
Telefax +49 7144 3309-50
info@probst-handling.com

**Probst GmbH**
Gottlieb-Daimler-Straße 6
71729 Erdmannhausen, Germany

www.probst-handling.com

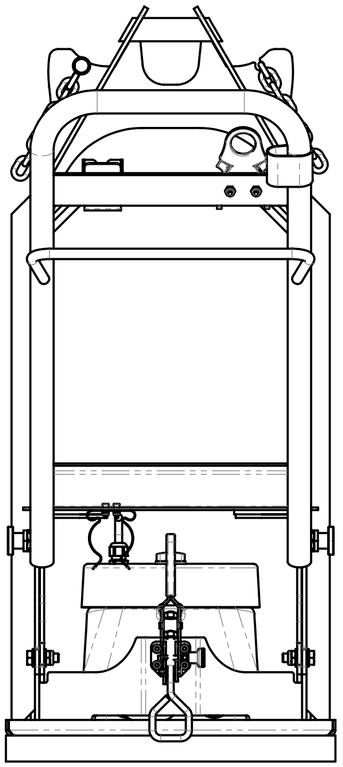

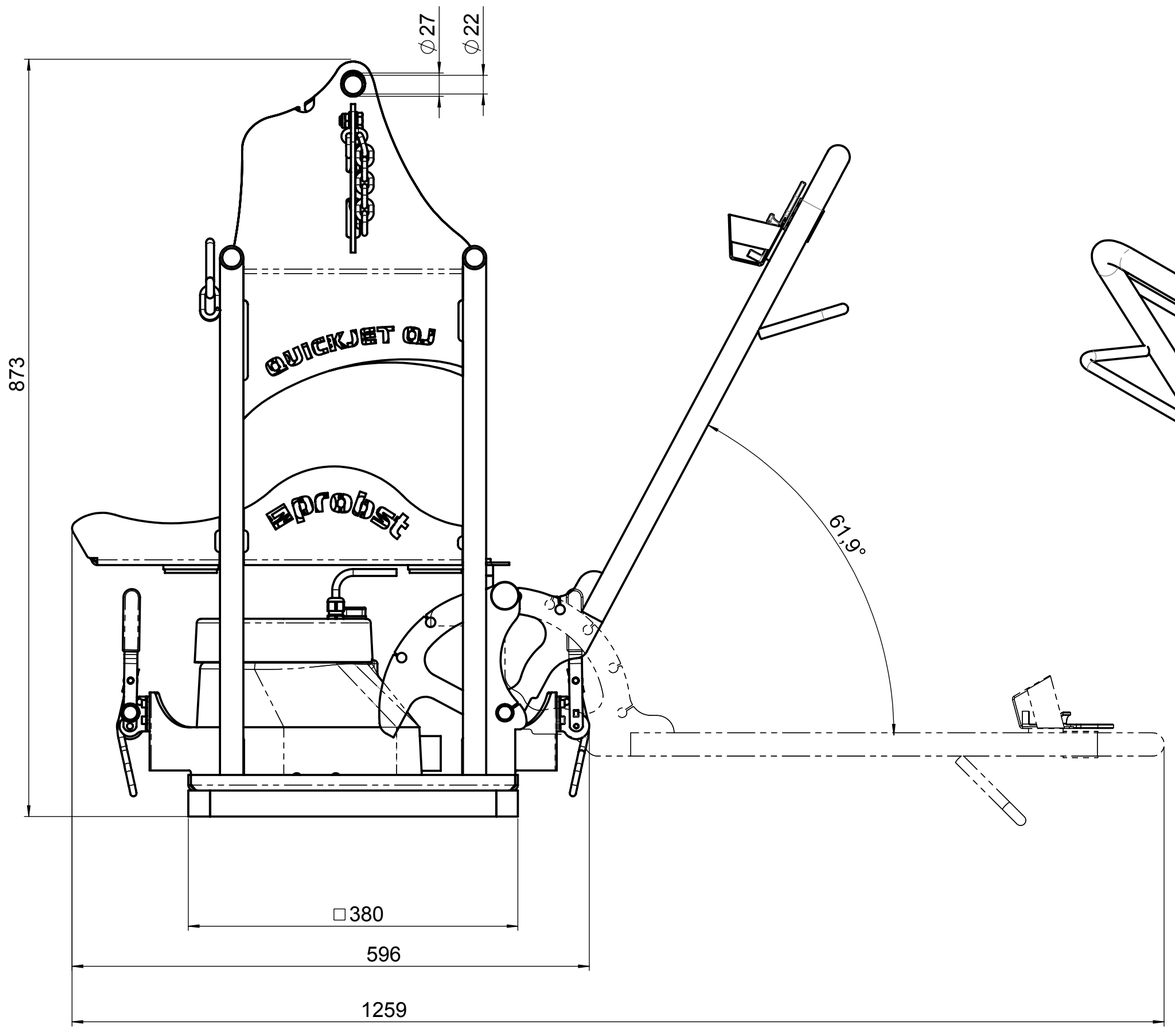


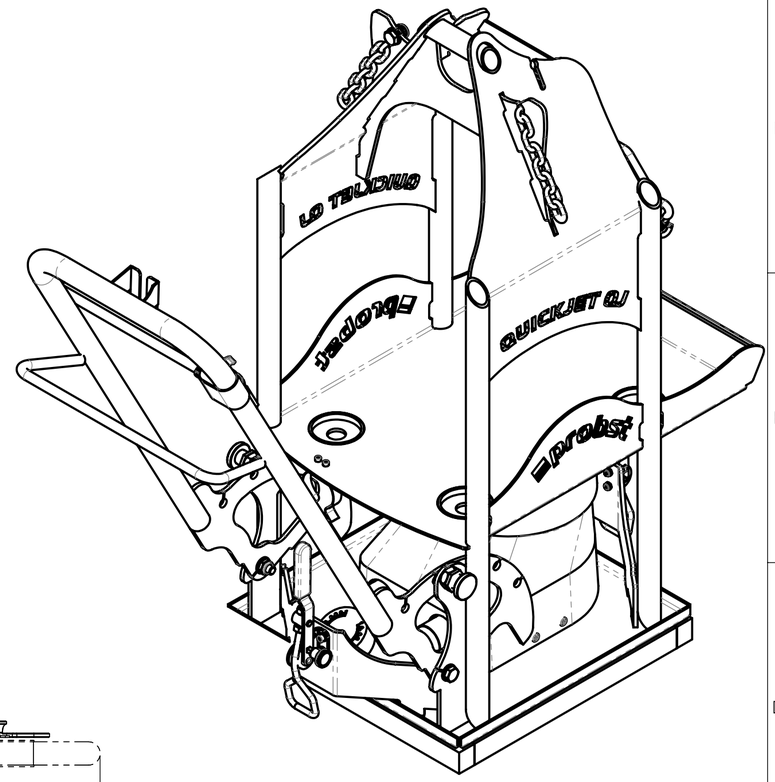


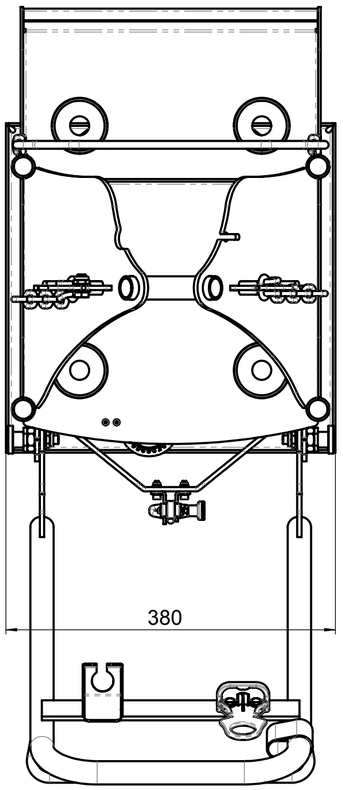


Tragkraft 600 kg max.
Lifting capacity 600 kg max

| | | | | |
|---|---|---|---|---|
| probst the better solution | Bei Änderungen Rücksprache TB ! | | | |
| | | Gewicht: 41,3 kg | | |
| | Schutzvermerk nach DIN 34 beachten! Nachdruck nur mit unserer Genehmigung! | | | |
| | | Datum | Name | Benennung |
| | Erst. | 17.1.2011 | Perumal.Hurth | Vakuum-Hebegerät QUICKJET QJ 110V /60 Hz ohne Stromerzeuger mit integrierter Grund-Saugplatte ESP 120-38/38 mit Sicherungskette |
| | Gepr. | | | |
| | WA: | | | Artikelnummer/Zeichnungsnummer D52400034 |
| | Kunde: | | | Blatt 1 von 1 |
| Zust. | Urspr. | | | Ers. f. / Ers. d. |

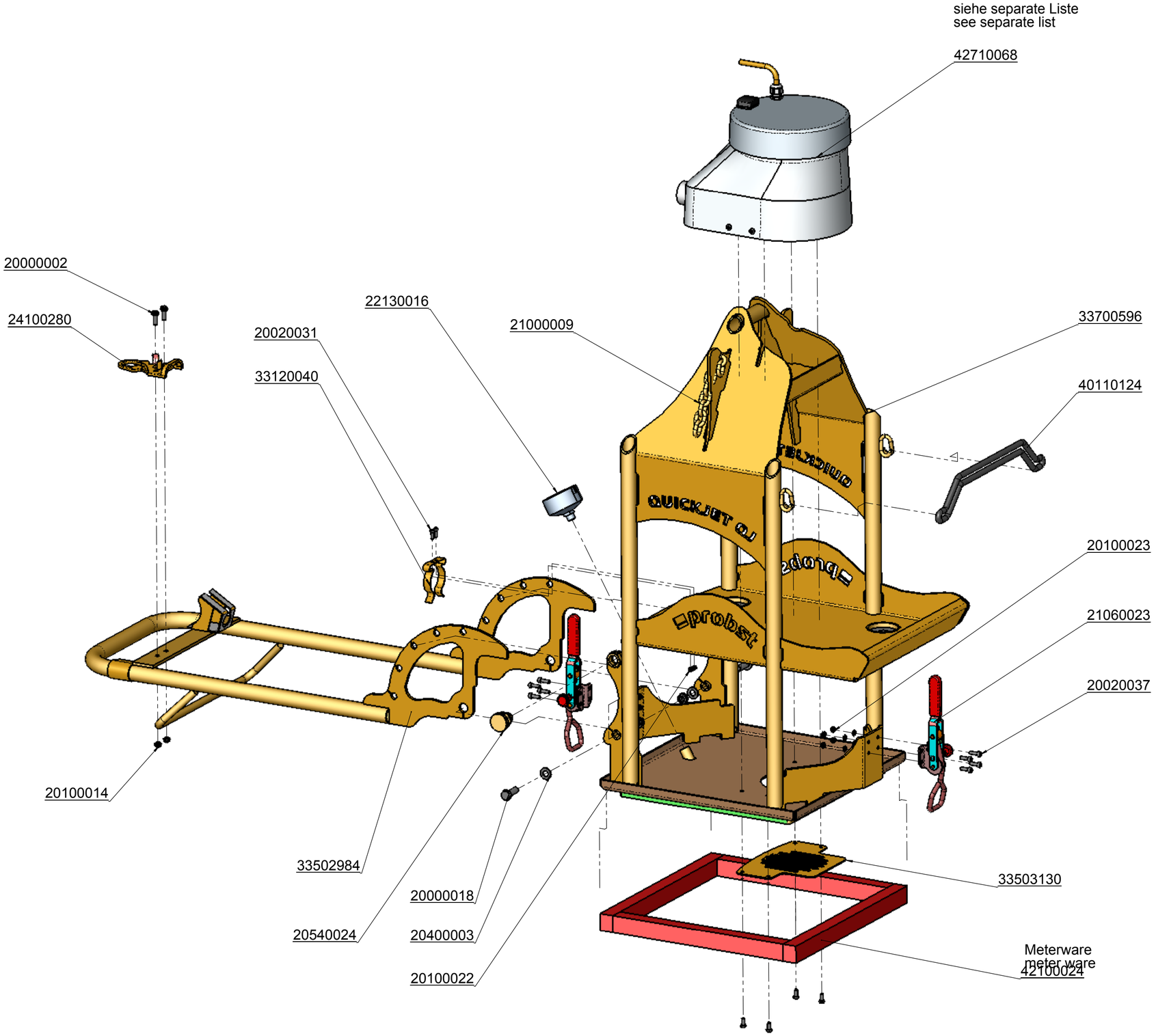


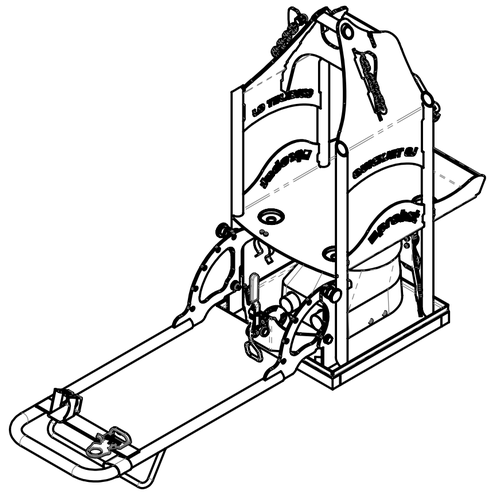

probst
the better solution

Bei Änderungen Rücksprache TB !

Gewicht: 35,7 kg

Schutzvermerk nach DIN 34 beachten!
Nachdruck nur mit unserer Genehmigung!

| | Datum | Name |
|---|---|---|
| Erst. | 17.1.2011 | Perumal.Hurth |
| Gepr. | | |

Benennung
Vakuum-Hebegerät QUICKJET QJ
110V /60 Hz ohne Stromerzeuger
mit integrierter Grund-Saugplatte
ESP 120-38/38 mit Sicherungskette

WA:

Kunde:

Artikelnummer/Zeichnungsnummer
E52400034

Blatt 1 von 1

Zust. | Urspr. | Ers. f. | Ers. d.

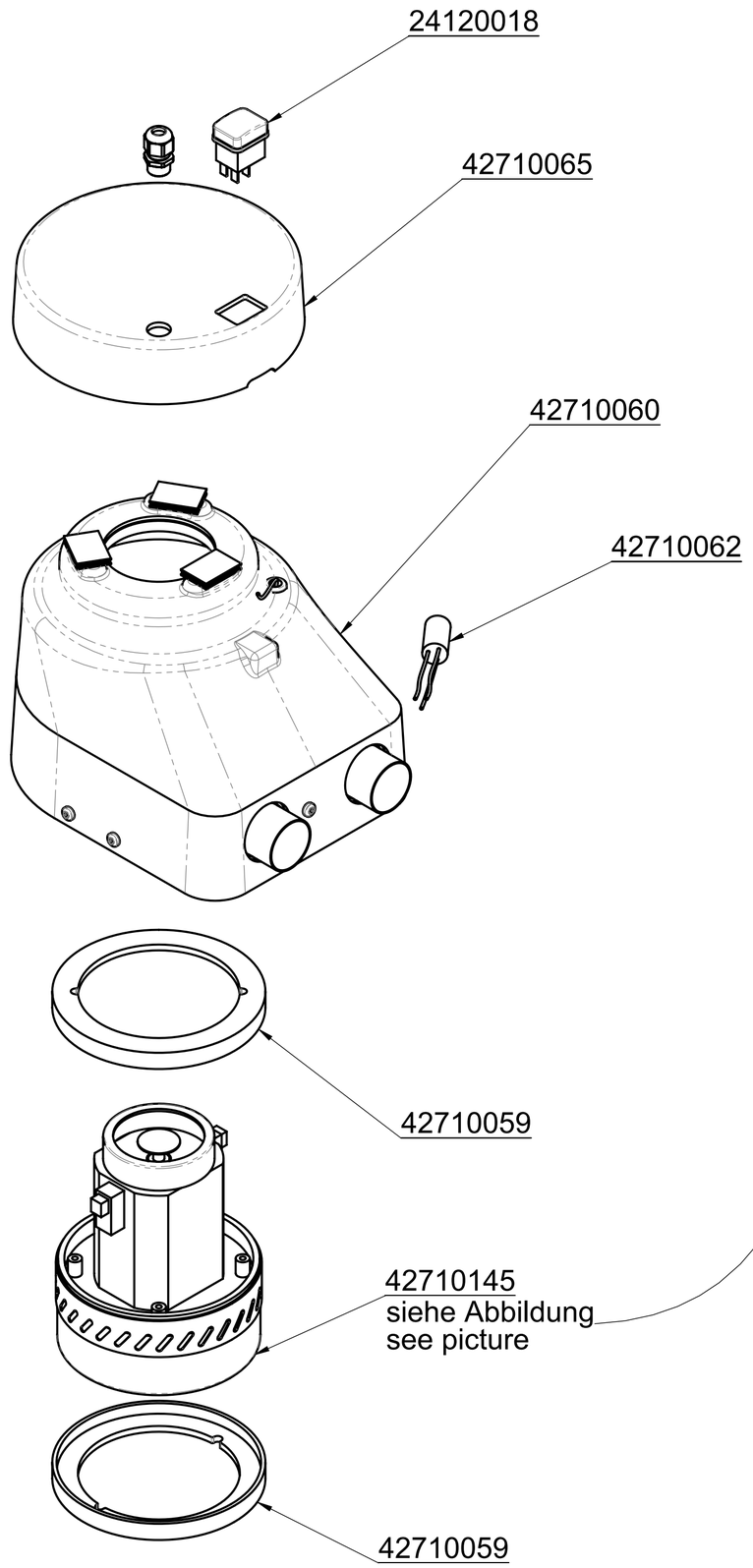


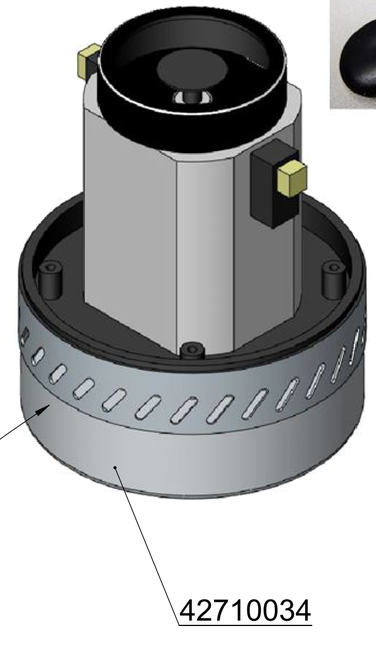


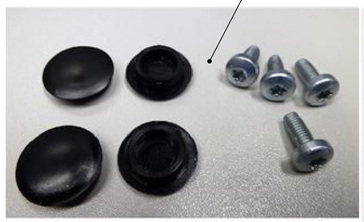


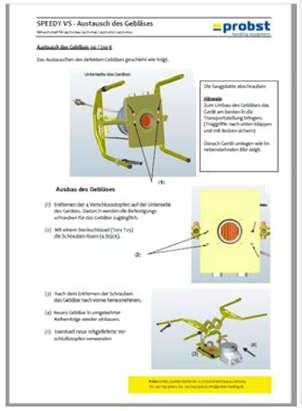


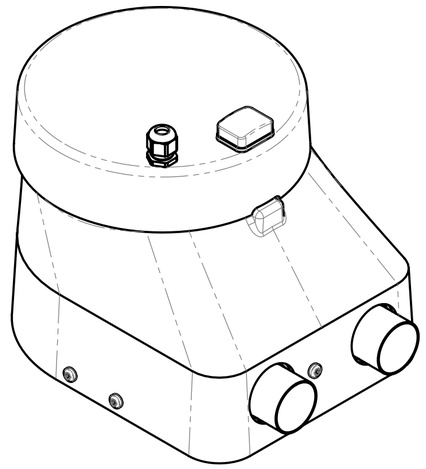

| | | | | |
|---|---|---|---|---|
| probst handling equipment | | | | © all rights reserved conform to ISO 16016 |
| | | Datum | Name | Benennung<br>Gebläseeinheit kompl. für Speedy VS-S und QJ<br>230 V/50 Hz |
| | Erst. | 5.12.2013 | Michael.Wunder | |
| | Gepr. | 16.2.2016 | I.Krasnikov | |
| | | | | Artikelnummer/Zeichnungsnummer<br>E42710061 |
| | | | | Blatt 1 von 1 |
| Zust. | Urspr. | | | Ers. f. / Ers. d. |

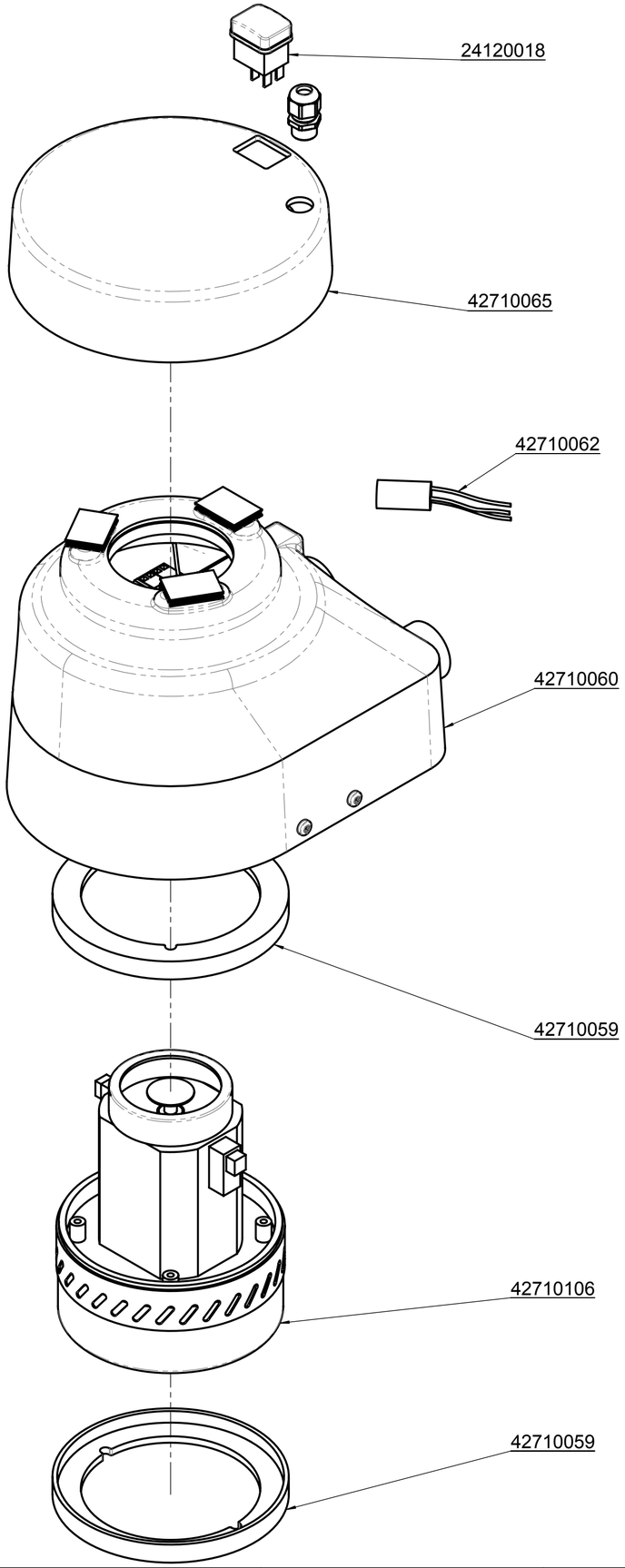


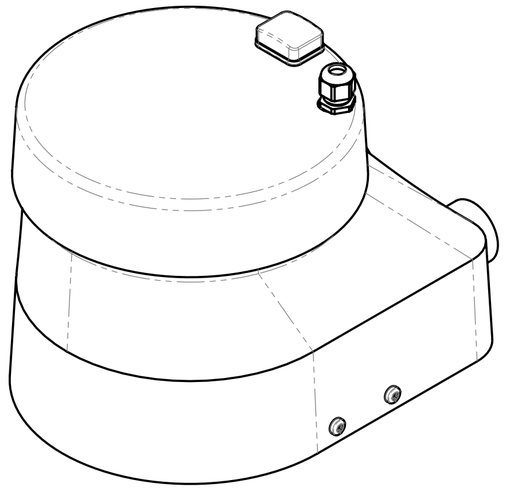

probst handling equipment



| | | Datum | Name |
|---|---|---|---|
| | Erst. | 16.2.2016 | I.Krasnikov |
| | Gepr. | 16.2.2016 | I.Krasnikov |

Benennung

Gebläseeinheit kompl. für Speedy VS-S

110V/60Hz

Artikelnummer/Zeichnungsnummer

E42710068

Blatt 1 von 1

Zust. | Urspr. | Ers. f. | Ers. d.

# A52400033 QJ-600-E
# A52400034 QJ-600-E-110

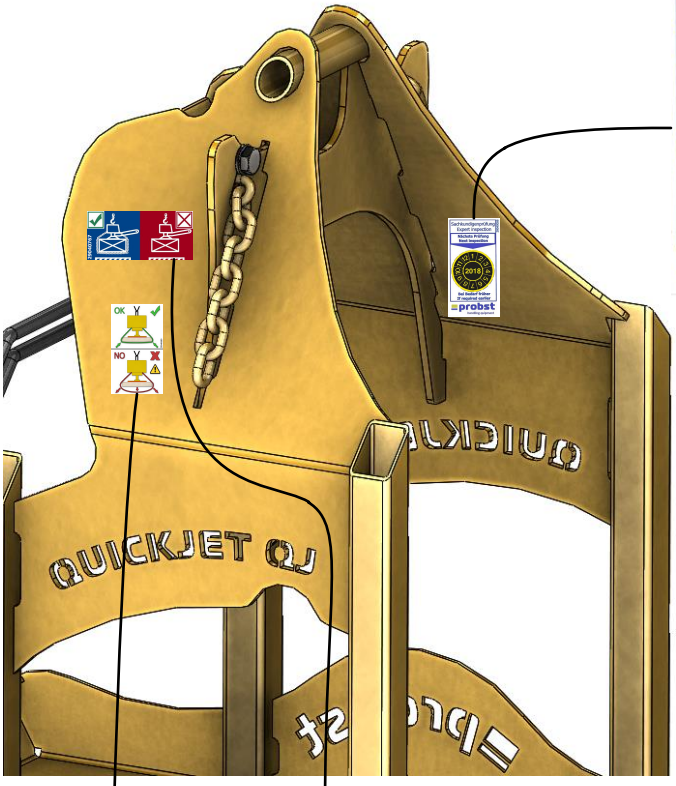



29040056



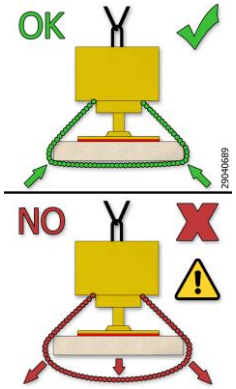


29040689
Auf beiden
Seiten/
On both sides

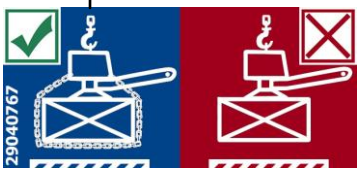


29040767
Auf beiden Seiten/
On both sides


29040221
Auf beiden
Seiten/
on both sides

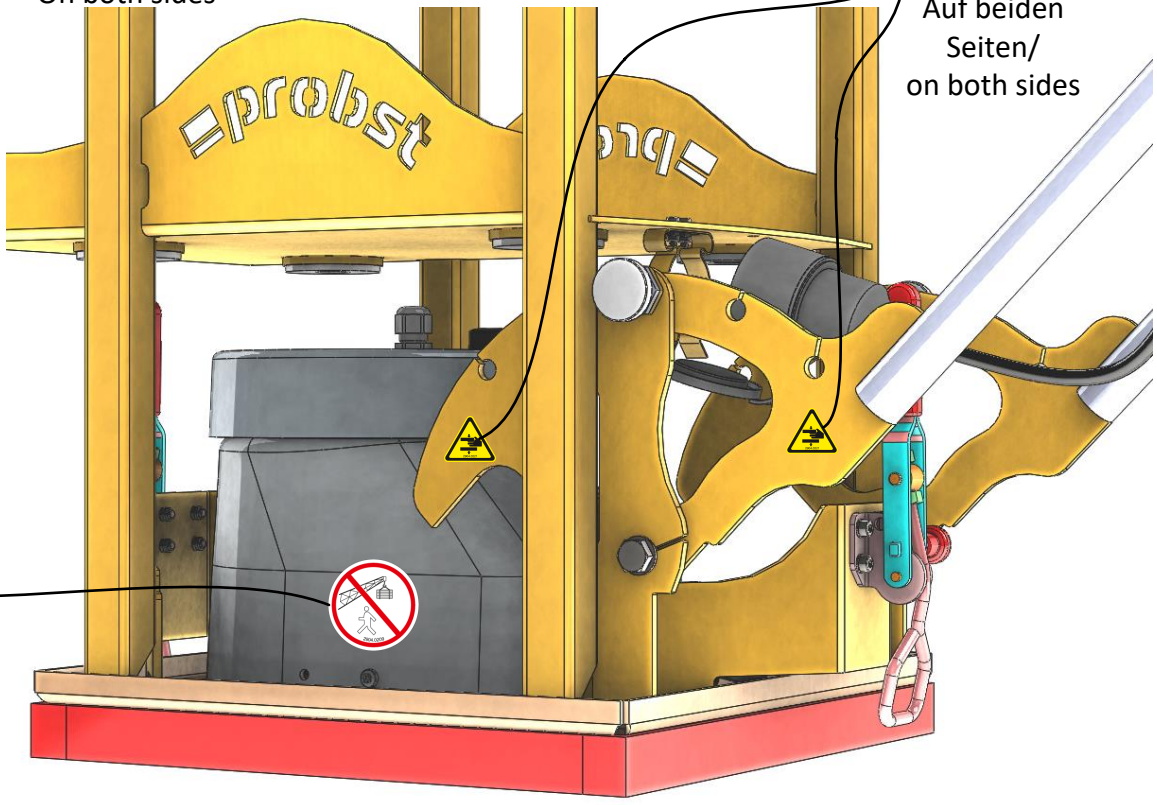



29040209



Einige der Abbildungen sind möglicherweise optionales Zubehör des Gerätes/Some of pictures may be optional equipment of the device.

# A52400033 QJ-600-E
# A52400034 QJ-600-E-110

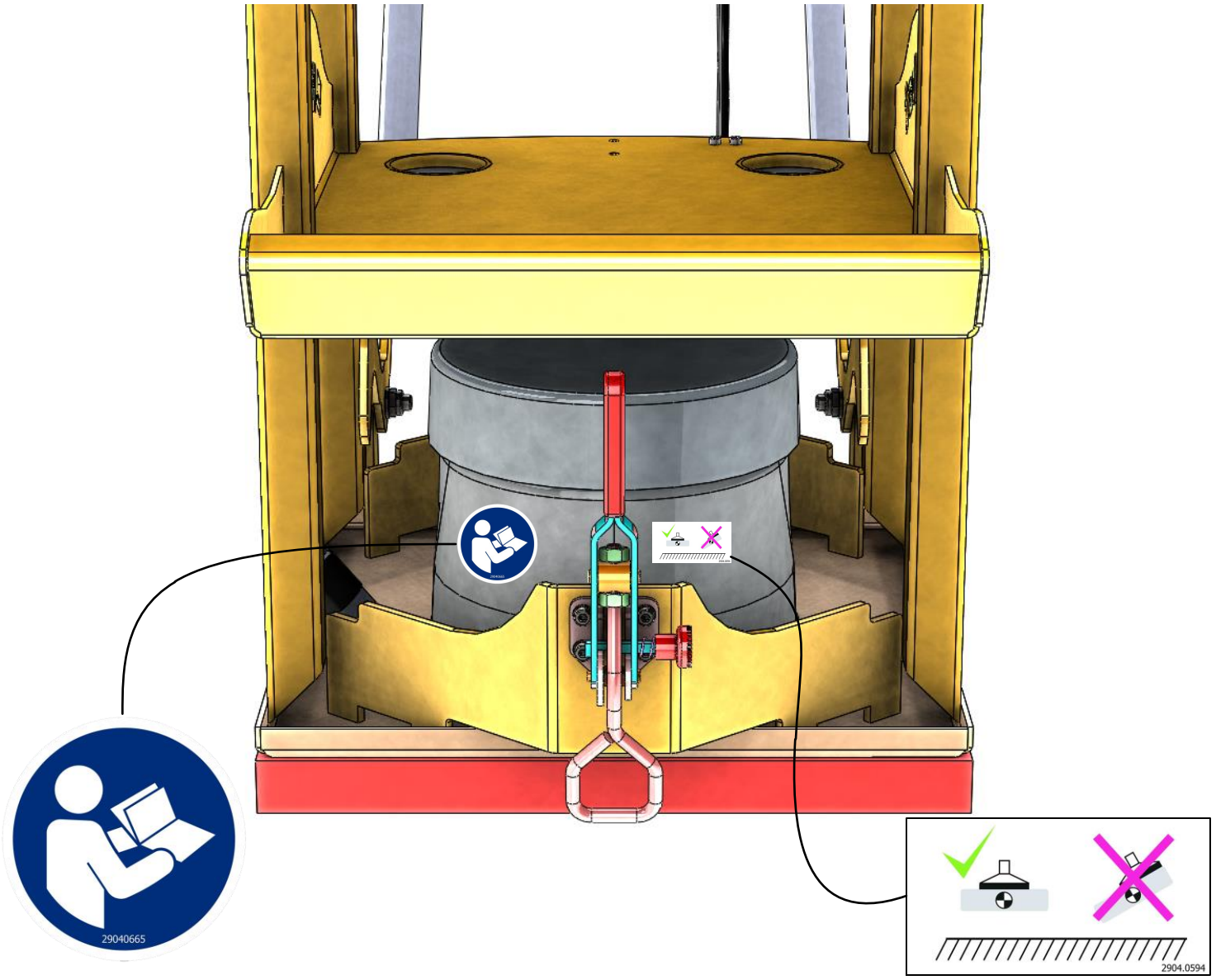


29040665

29040594

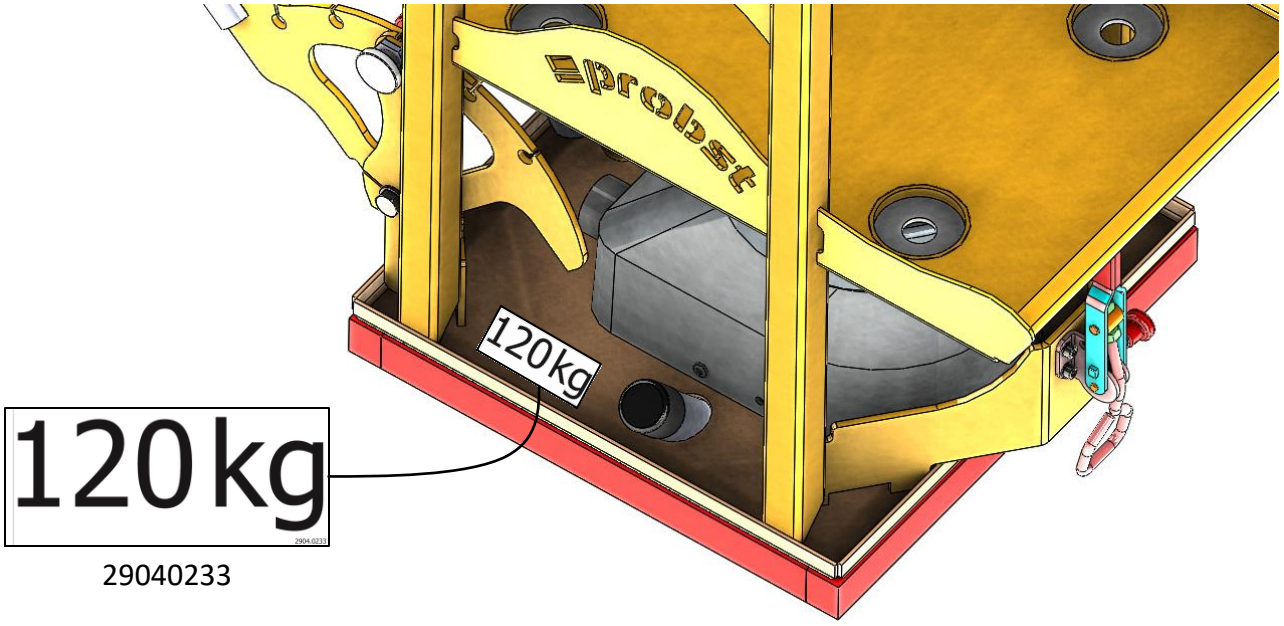


29040233



Einige der Abbildungen sind möglicherweise optionales Zubehör des Gerätes/Some of pictures may be optional equipment of the device.

# Fault diagnosis QUICKJET QJ-600-E

probst
the better solution

**Load (stone slab) is not lifted**

Leak test OK?

INFO

NO

YES

OR

visual inspection *mechanics* OK?

NO

YES

visual inspection *Electrics* OK?

NO

YES

Suction plate sealing OK?

NO

YES

## Leak test

With the help of the „leak test" it can be checked quicly and reliably the vacuum and the the function of the vacuum fan.
Remove the suction plate, switch on the device and close the lower opening of the device (e.g. with plexiglass or a sheet metal plate).
Underpressure of min. 0,2 bar must be reached on the pressure gauge.

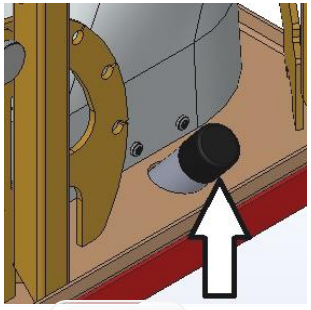

Picture 1

Suction plate sealing is damaged. Remove and clean the suction plate sealing .
Replace if damaged.

All functions on the device are OK, but load (stone slab) can not be lifted .

Possible causes: uneven surfaces; cracks; recesses (gaps); too much air-permeable material (porous); weight is too large.

***Vacuum fan running, but load will not be sucked***

- A clogged filter ? → Clean it.
- Not locked quick-release fasteners.
- Cover plate (see picture) at the vacuum fan is missing? → replace it.

***No vacuum exists/ device doesn't work***

- Check the generator:
  - Is the tank venting open ?
  - Is the fuel minimum level below?
  - Is the oil minimum level below?
  - At cold start „Joke" !- Main switch to „ON"?
- Check the ON/ OFF switch at the vacuum fan.

***Contact service:***
E-Mail: service@probst.eu
phone: +49 4177 – 3309 - 0

***Vacuum fan will not start***

- Check the current/power supply.
- Is the power plug not plugged in correctly t? → Check it.
- Is the vacuum fan damaged? → Check it.
- Check the ON/ OFF switch at the handhold.
- Is the vacuum fan overheated? → Allow the vacuum fan to cool down.
- Is the electricity generator damaged? → Check it.

***Contact service:***
E-Mail: service@probst.eu
phone: +49 4177 – 3309 - 0

**All functions are OK, Load (stone slab) is lifted**